# 2023 KLX®300SM

## PARTS DIAGRAM

### Owner's Tools

F2810

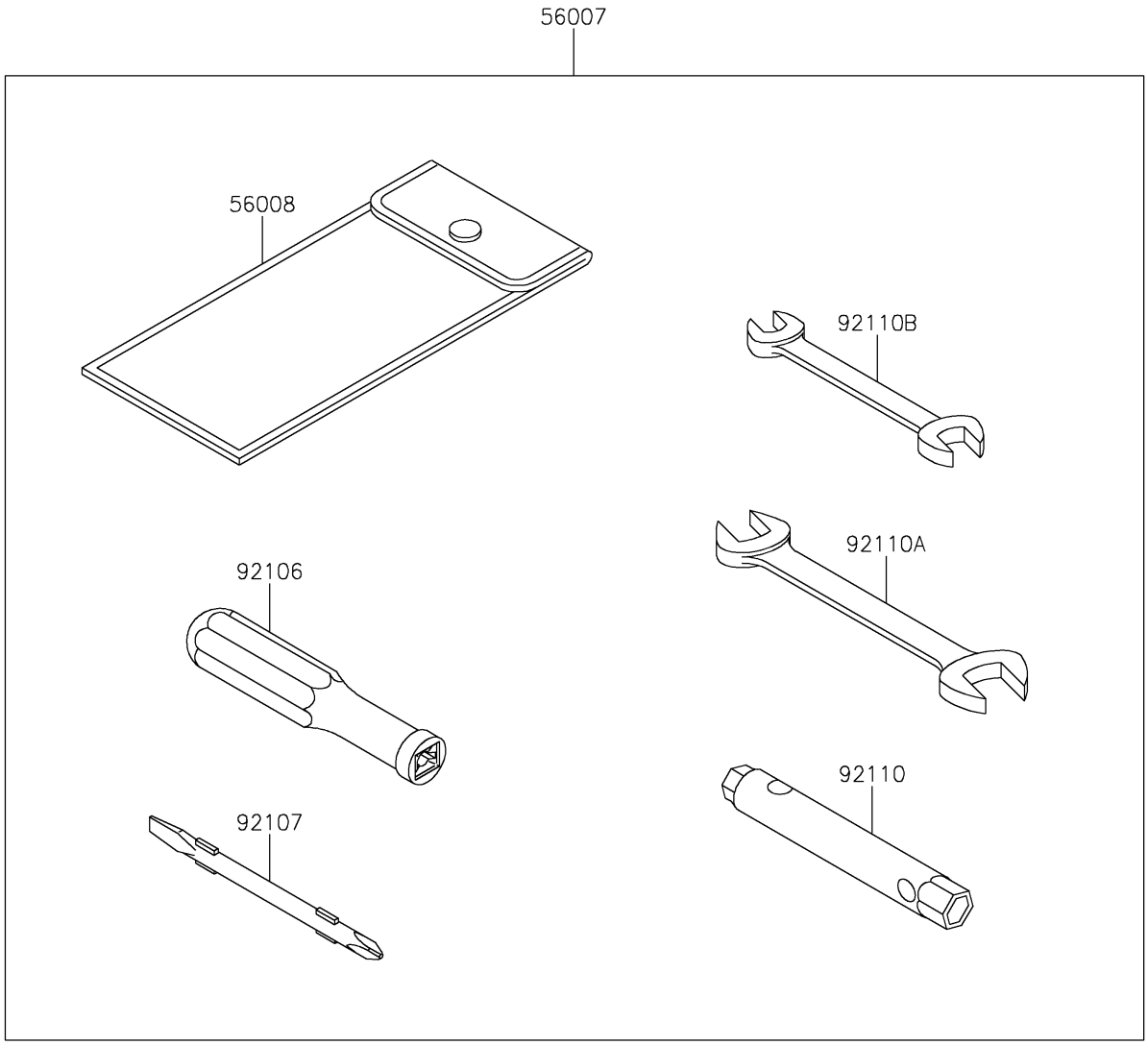


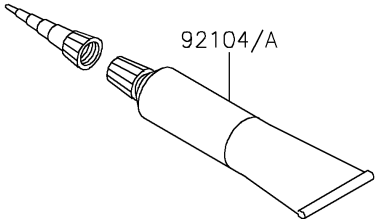


© 2026 Kawasaki Motors Corp., U.S.A.

# 2023 KLX®300SM

## PARTS LIST

Owner's Tools

| ITEM NAME | PART NUMBER | QUANTITY |
|---|---|---|

© 2026 Kawasaki Motors Corp., U.S.A.