2023 KLX®300SM

PARTS DIAGRAM

Cables

F2540

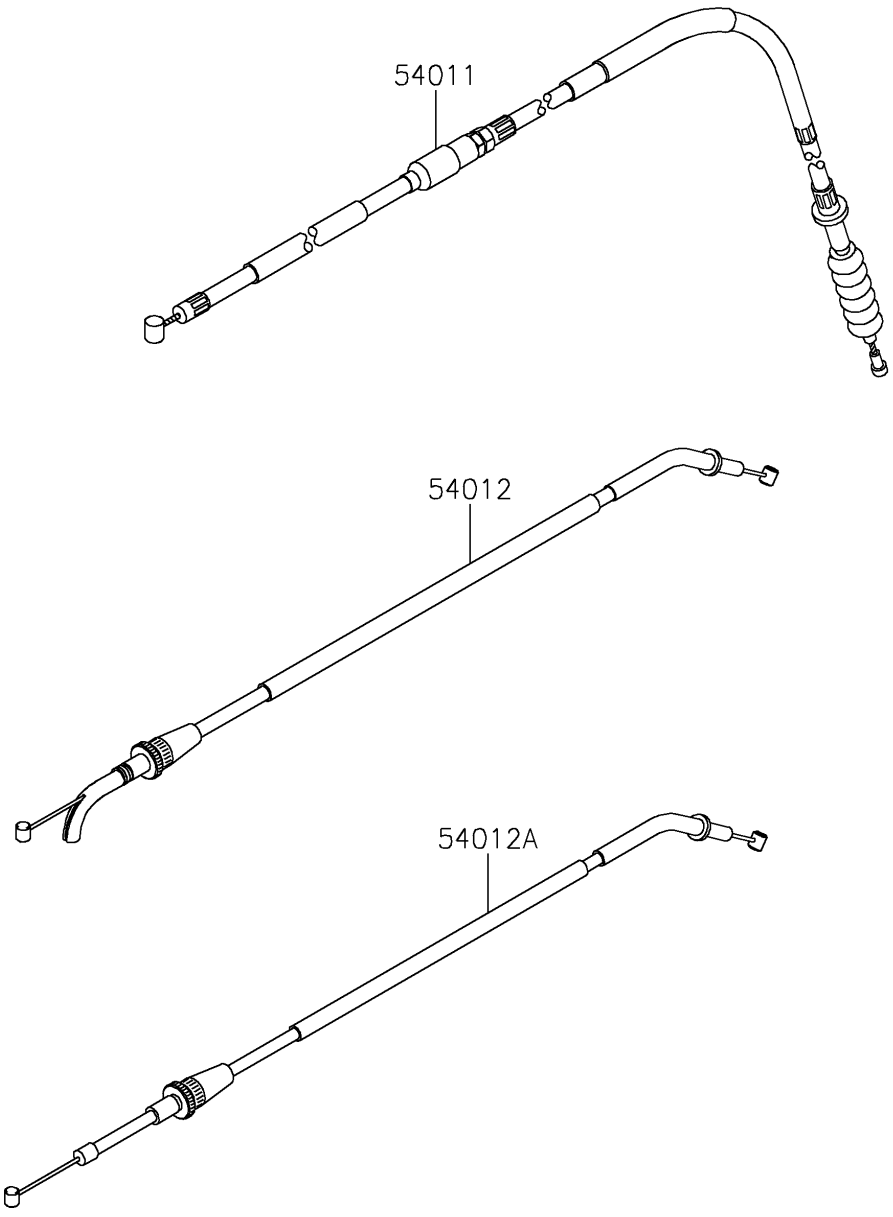

© 2026 Kawasaki Motors Corp., U.S.A.

2023 KLX®300SM

PARTS LIST

Cables

ITEM NAME	PART NUMBER	QUANTITY
CABLE-CLUTCH (Ref # 54011)	54011-0653	1
CABLE-THROTTLE,OPENING (Ref # 54012)	54012-0227	1
CABLE-THROTTLE,CLOSING (Ref # 54012A)	54012-0256	1

© 2026 Kawasaki Motors Corp., U.S.A.