2001 Vulcan 1500 Nomad

PARTS DIAGRAM

Swingarm

F2141

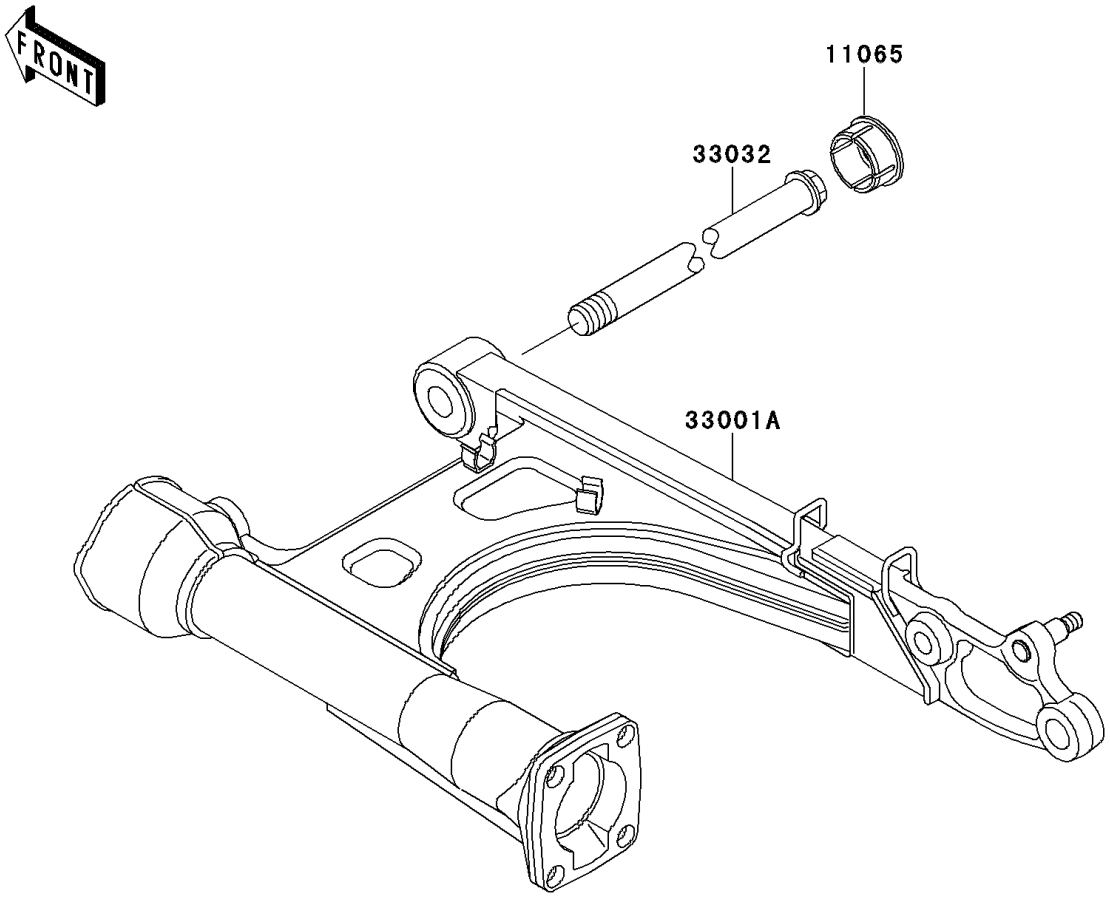

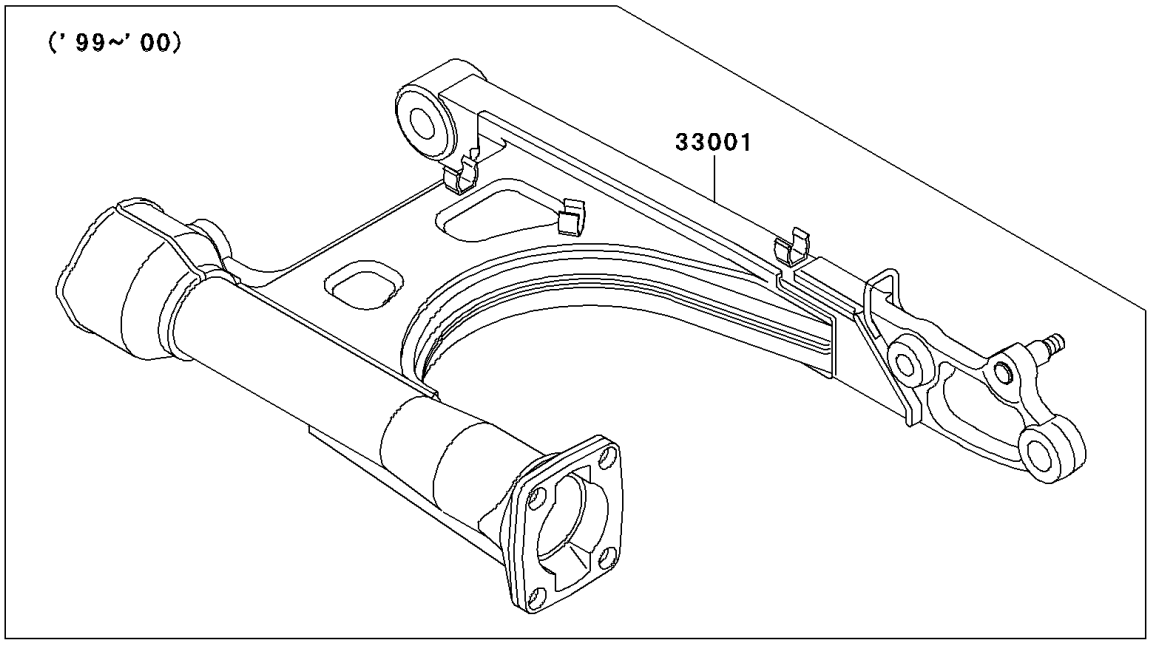

© 2026 Kawasaki Motors Corp., U.S.A.

2001 Vulcan 1500 Nomad

PARTS LIST

Swingarm

ITEM NAME	PART NUMBER	QUANTITY
CAP,SWING ARM (Ref # 11065)	11065-1099	1
ARM-COMP-SWING (Ref # 33001A)	33001-1600	1
SHAFT-SWING ARM (Ref # 33032)	33032-1181	1

© 2026 Kawasaki Motors Corp., U.S.A.