2022 KLR®650

PARTS DIAGRAM

Accessory(Topcase)

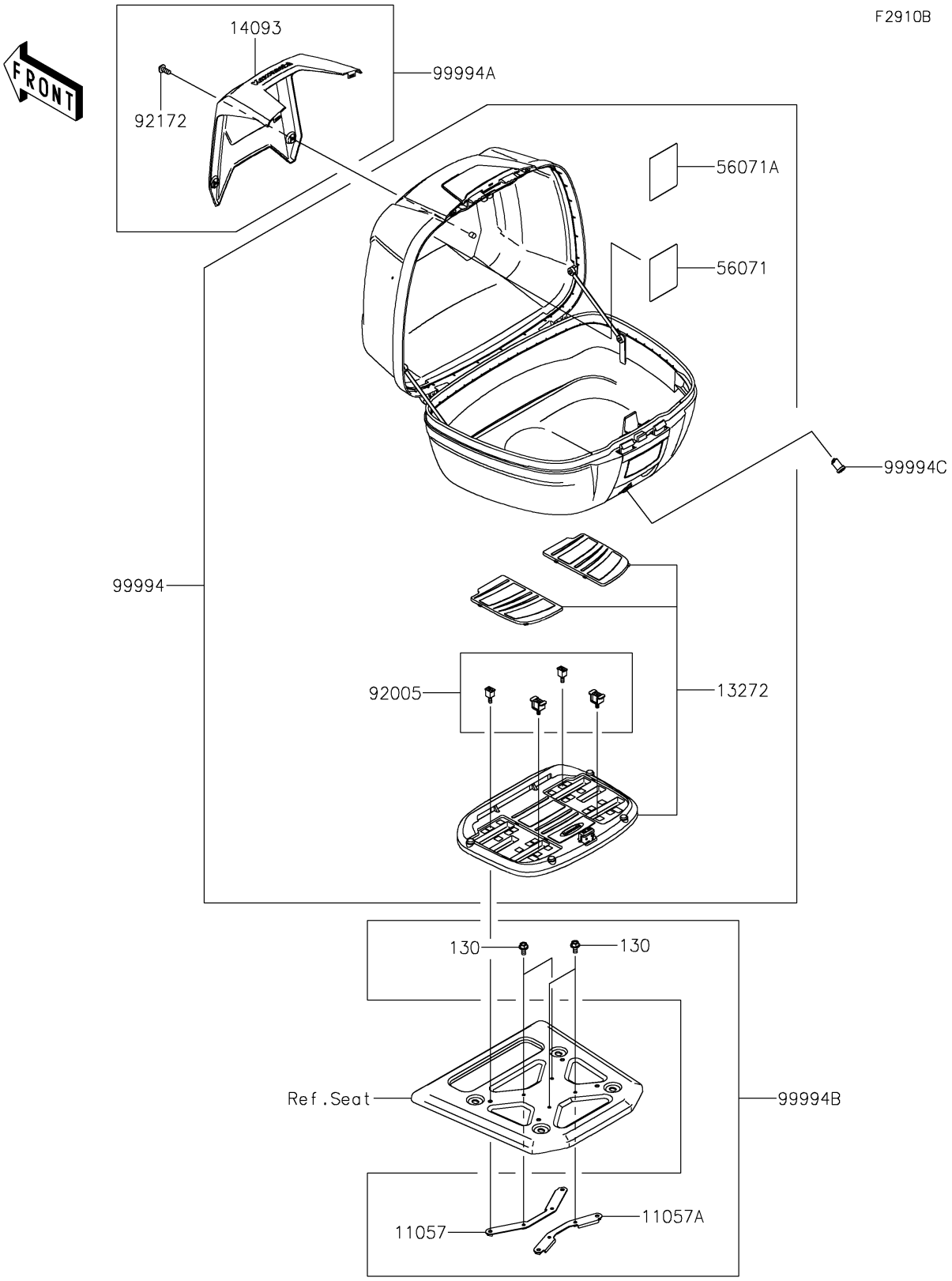

© 2026 Kawasaki Motors Corp., U.S.A.

2022 KLR®650

PARTS LIST

Accessory(Topcase)

Kawasaki
Let the Good Times Roll®

ITEM NAME	PART NUMBER	QUANTITY
BRACKET (Ref # 11057)	11057-7099	1
BRACKET (Ref # 11057A)	11057-7100	1
PLATE,TOPCASE BASE (Ref # 13272)	13272-3743	1
COVER,TOPCASE,M.P.SILVER (Ref # 14093)	14093-1067-GU	1
LABEL-WARNING,MAX LOAD (Ref # 56071)	56071-0940	1
LABEL-WARNING,PICTOGRAM (Ref # 56071A)	56071-1043	1
FITTING (Ref # 92005)	92005-1428	1
SCREW,SOCKET,5X14 (Ref # 92172)	92172-0823	2
TOPCASE (Ref # 99994)	99994-1493	1
PANEL-TOPCASE,M.P.SILVER (Ref # 99994A)	99994-1494-GU	1
FITTING-TOPCASE (Ref # 99994B)	99994-1495	1
ROTOR(INNER GROOVE) (Ref # 99994C)	99994-1496	1
BOLT-FLANGED,5X10 (Ref # 130)	130BA0510	4

© 2026 Kawasaki Motors Corp., U.S.A.