2022 KLR®650

PARTS DIAGRAM

Turn Signals

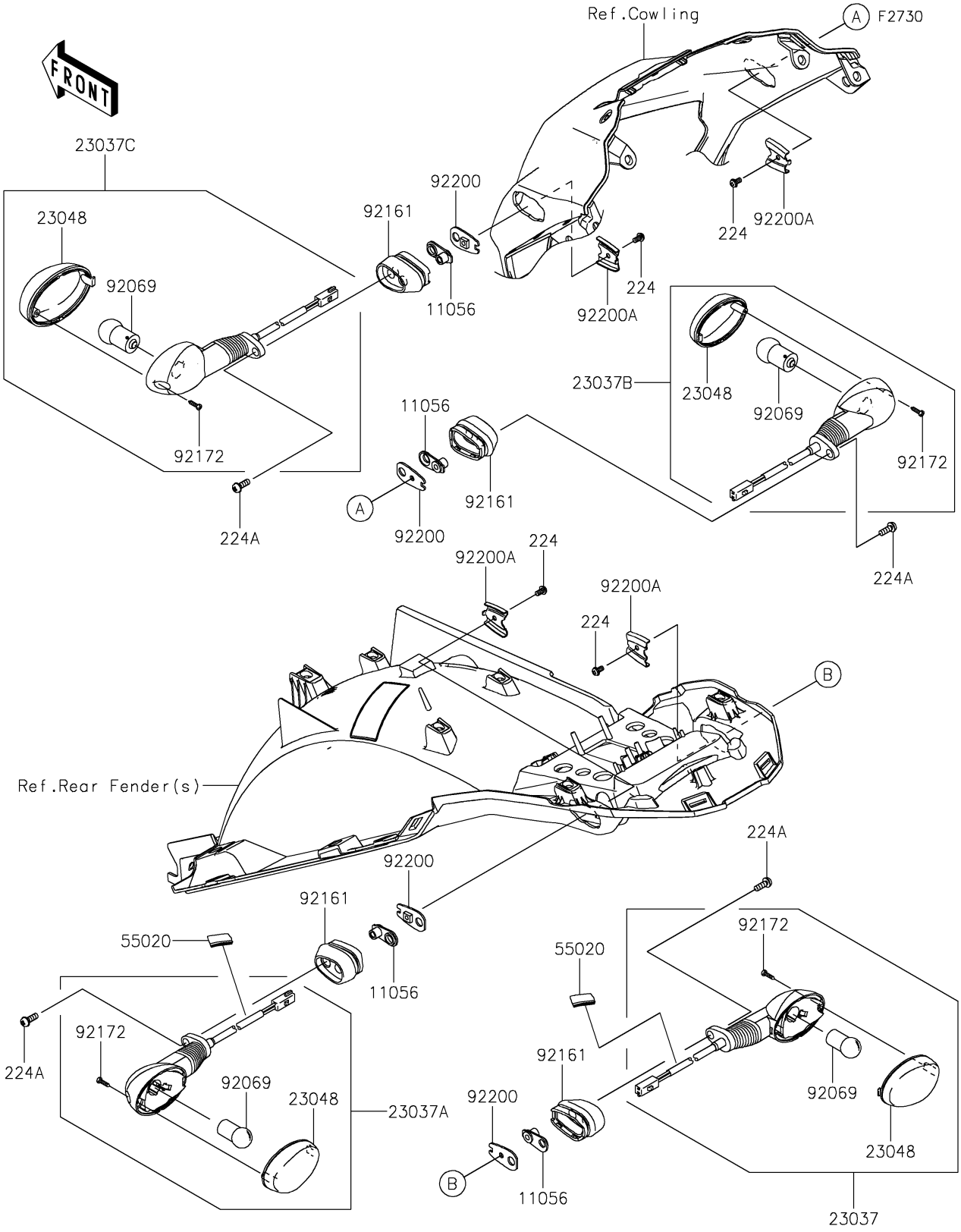

© 2026 Kawasaki Motors Corp., U.S.A.

2022 KLR®650

PARTS LIST

Turn Signals

ITEM NAME	PART NUMBER	QUANTITY
BRACKET,6MM (Ref # 11056)	11056-4156	4
LAMP-ASSY-SIGNAL,RR,RH (Ref # 23037)	23037-0416	1
LAMP-ASSY-SIGNAL,RR,LH (Ref # 23037A)	23037-0417	1
LAMP-ASSY-SIGNAL,FR,RH (Ref # 23037B)	23037-0418	1
LAMP-ASSY-SIGNAL,FR,LH (Ref # 23037C)	23037-0419	1
LENS-SIGNAL LAMP (Ref # 23048)	23048-0035	4
GUARD,50X30 (Ref # 55020)	55020-2334	2
BULB,12V 10W (Ref # 92069)	92069-0106	4
DAMPER,SIGNAL LAMP (Ref # 92161)	92161-1680	4
SCREW,TAPPING,2.9X13 (Ref # 92172)	92172-0343	4
WASHER,SIGNAL LAMP (Ref # 92200)	92200-0164	4
WASHER,SIGNAL LAMP (Ref # 92200A)	92200-0165	4
SCREW-PAN-WP-CROS,4X8 (Ref # 224)	224AB0408	4
SCREW-PAN-WP-CROS,6X14 (Ref # 224A)	224AB0614	4

© 2026 Kawasaki Motors Corp., U.S.A.