2022 KLR®650 TRAVELER

PARTS DIAGRAM

Rear Hub

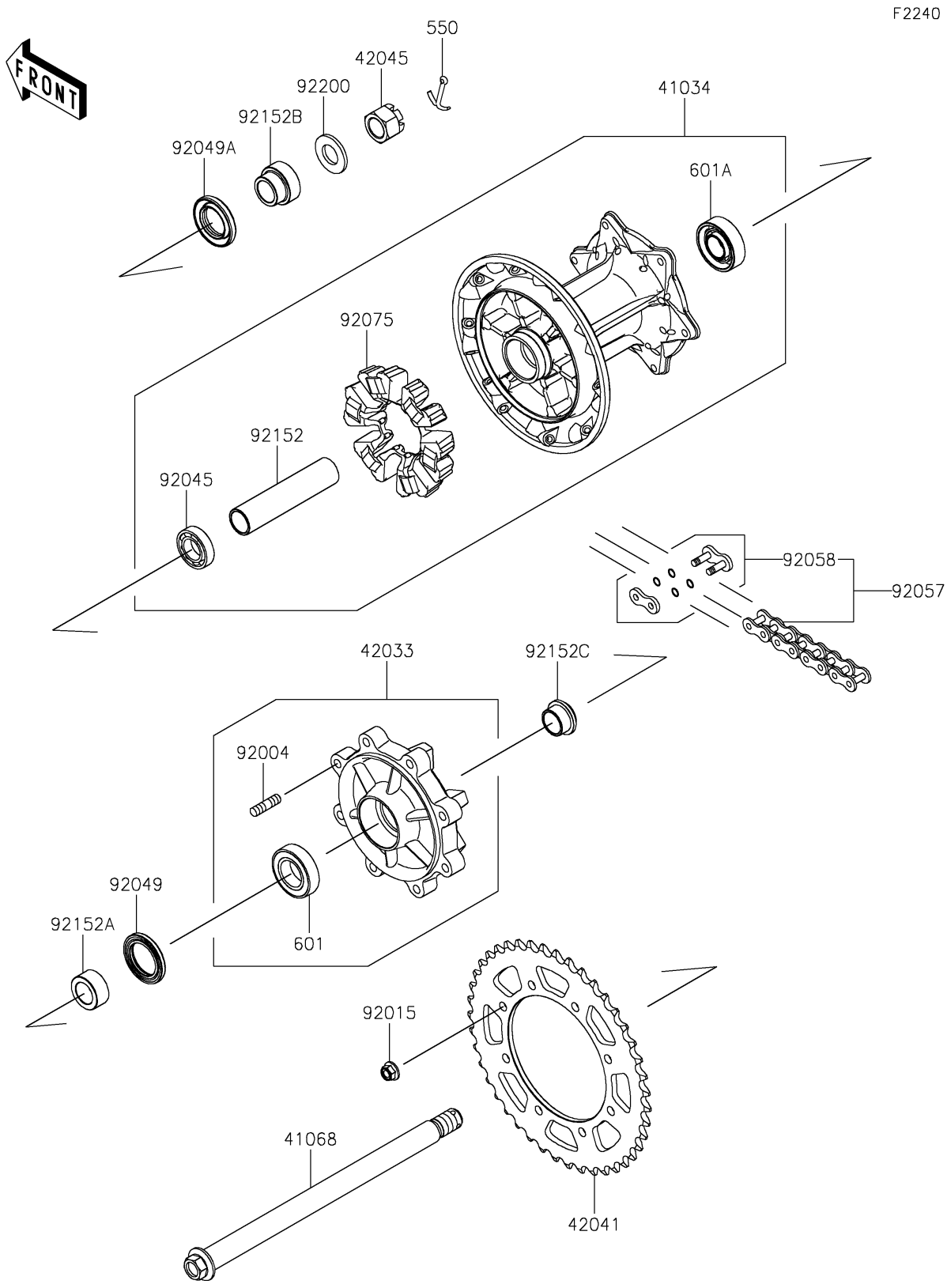

© 2026 Kawasaki Motors Corp., U.S.A.

2022 KLR®650 TRAVELER

PARTS LIST

Rear Hub

ITEM NAME	PART NUMBER	QUANTITY
DRUM-ASSY,RR (Ref # 41034)	41034-0609	1
AXLE,RR (Ref # 41068)	41068-0659	1
COUPLING-ASSY,REAR HUB (Ref # 42033)	42033-0596	1
SPROCKET-HUB,43T (Ref # 42041)	42041-0185	1
NUT,CASTLE,18MM (Ref # 42045)	42045-018	1
STUD,8X16 (Ref # 92004)	92004-1150	8
NUT,8MM (Ref # 92015)	92015-1432	8
BEARING-BALL,20X37X9 (Ref # 92045)	92045-0942	1
SEAL-OIL,32X47X5 (Ref # 92049)	92049-0795	1
SEAL-OIL,27X47X7 (Ref # 92049A)	92049-0802	1
CHAIN,DRIVE,520VEX110L (Ref # 92057)	92057-0806	1
JOINT-CHAIN (Ref # 92058)	92058-0044	1
DAMPER,SHOCK,RR HUB (Ref # 92075)	92075-1068	1
COLLAR,20.2X28X110.5 (Ref # 92152)	92152-2735	1
COLLAR,LH (Ref # 92152A)	92152-2736	1
COLLAR,RH (Ref # 92152B)	92152-2737	1
COLLAR,COUPLING (Ref # 92152C)	92152-2738	1
WASHER,19X36X3.2 (Ref # 92200)	92200-0296	1
PIN-COTTER,4.0X35 (Ref # 550)	550AA4035	1
BEARING-BALL,#6005UU (Ref # 601)	601B6005UU	1
BEARING-BALL,#6204UG (Ref # 601A)	601B6204UG	1

© 2026 Kawasaki Motors Corp., U.S.A.