2022 KLR®650

PARTS DIAGRAM

Cylinder/Piston(s)

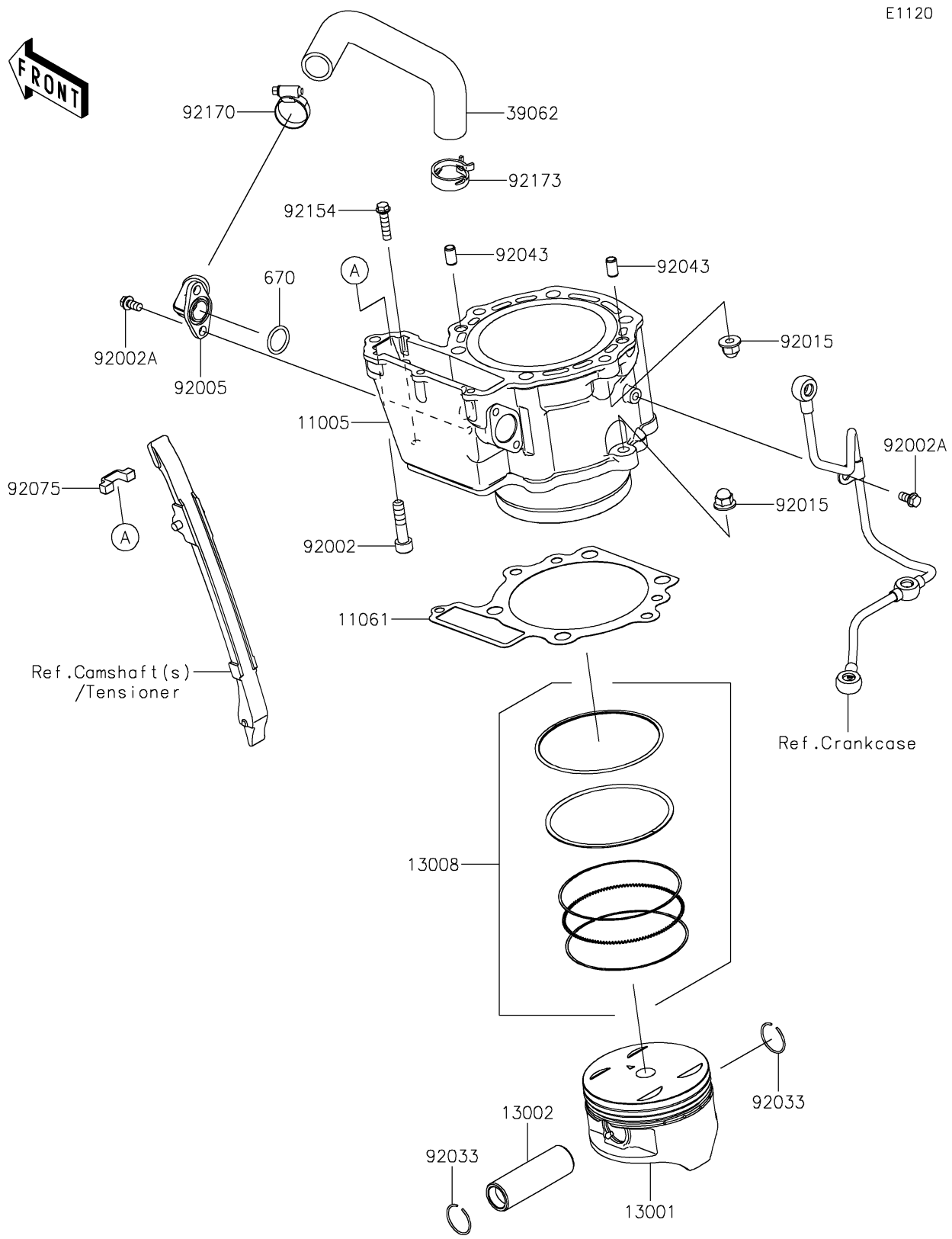

© 2026 Kawasaki Motors Corp., U.S.A.

2022 KLR®650

PARTS LIST

Cylinder/Piston(s)

ITEM NAME	PART NUMBER	QUANTITY
CYLINDER-ENGINE (Ref # 11005)	11005-0736	1
GASKET,CYLINDER BASE (Ref # 11061)	11061-0428	1
PISTON-ENGINE (Ref # 13001)	13001-0723	1
PIN-PISTON (Ref # 13002)	13002-0707	1
RING-SET-PISTON (Ref # 13008)	13008-0595	1
HOSE-COOLING,W/P-CYLINDER (Ref # 39062)	39062-0150	1
BOLT,SOCKET,8X35 (Ref # 92002)	92002-1409	1
BOLT,6X12 (Ref # 92002A)	92002-1569	3
FITTING (Ref # 92005)	92005-0784	1
NUT,CAP,8MM (Ref # 92015)	92015-1982	4
RING-SNAP (Ref # 92033)	92033-1226	2
PIN,6.2X8X14 (Ref # 92043)	92043-1263	2
DAMPER (Ref # 92075)	92075-1968	1
BOLT,FLANGED,6X25 (Ref # 92154)	92154-1212	1
CLAMP,COOLING HOSE (Ref # 92170)	92170-1033	1
CLAMP (Ref # 92173)	92173-2459	1
O RING,18MM (Ref # 670)	670B2018	1

© 2026 Kawasaki Motors Corp., U.S.A.