2021 KLX®300

PARTS DIAGRAM

Fuel Pump

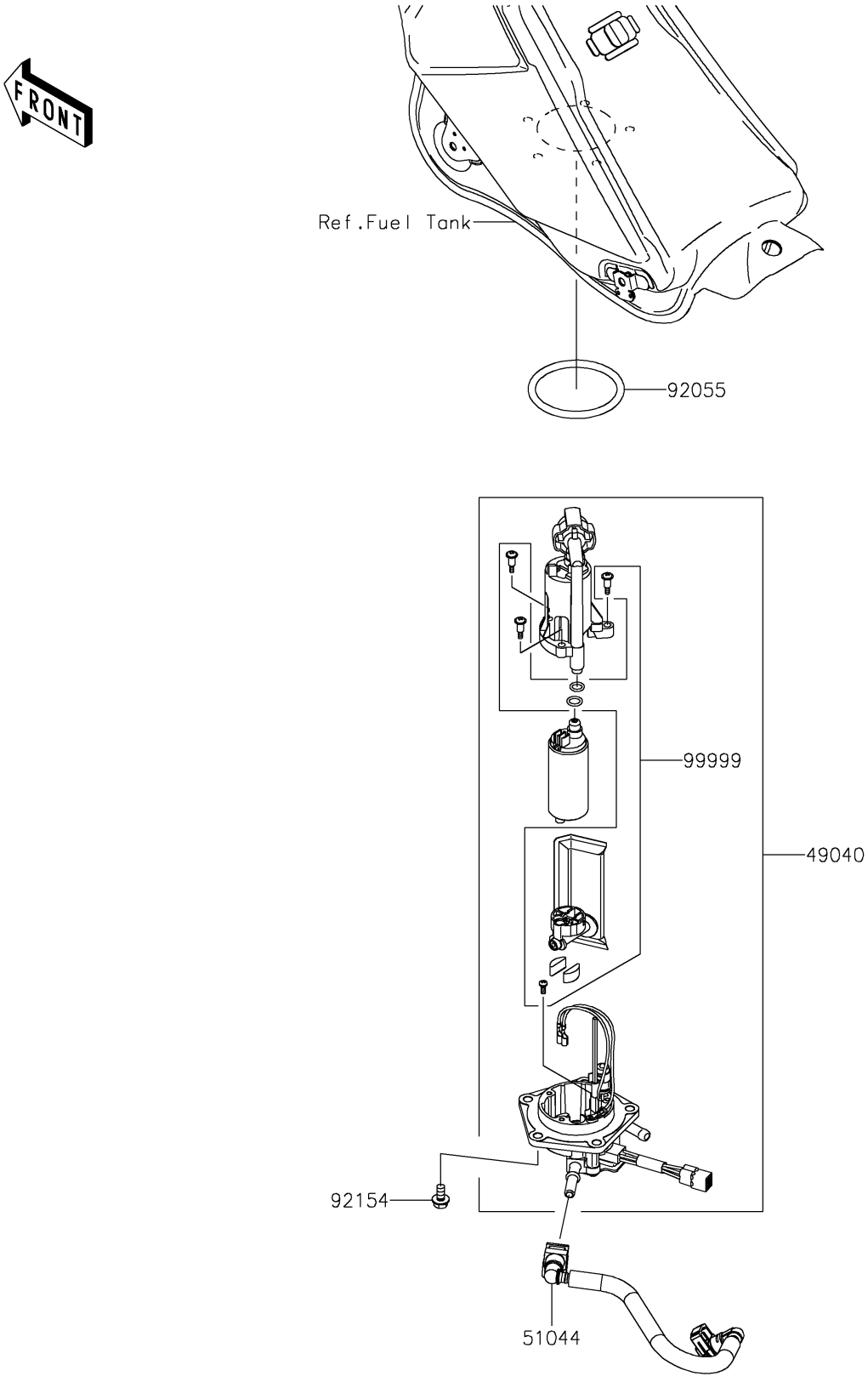

© 2026 Kawasaki Motors Corp., U.S.A.

2021 KLX®300

PARTS LIST

Fuel Pump

ITEM NAME	PART NUMBER	QUANTITY
PUMP-FUEL (Ref # 49040)	49040-0805	1
TUBE-ASSY (Ref # 51044)	51044-0945	1
RING-O,64.6X5.7 (Ref # 92055)	92055-0185	1
BOLT,FLANGED,6X12 (Ref # 92154)	92154-2335	5
KIT.,FUEL FILTER (Ref # 99999)	99999-0535	1

© 2026 Kawasaki Motors Corp., U.S.A.