2020 KLX®250 CAMO

PARTS DIAGRAM

Cylinder/Piston(s)

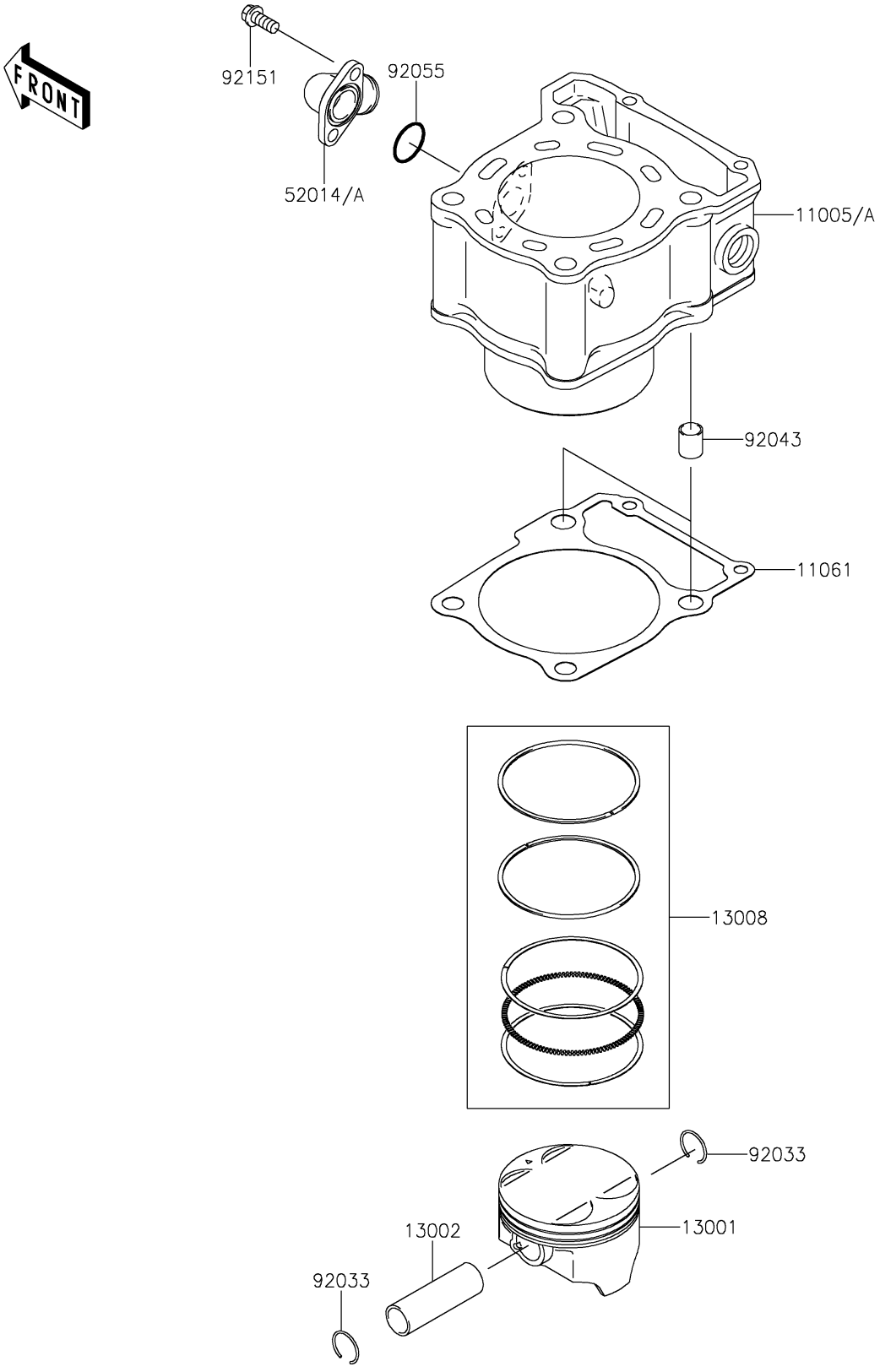

© 2026 Kawasaki Motors Corp., U.S.A.

2020 KLX®250 CAMO

PARTS LIST

Cylinder/Piston(s)

ITEM NAME	PART NUMBER	QUANTITY
CYLINDER-ENGINE (Ref # 11005A)	11005-0655	1
GASKET,CYLINDER BASE (Ref # 11061)	11061-1307	1
PISTON-ENGINE (Ref # 13001)	13001-0102	1
PIN-PISTON (Ref # 13002)	13002-1073	1
RING-SET-PISTON (Ref # 13008)	13008-1149	1
ELBOW (Ref # 52014A)	52014-0006	1
RING-SNAP (Ref # 92033)	92033-1054	2
PIN,10.1X12X14 (Ref # 92043)	92043-4009	2
RING-O,19.5X1.5 (Ref # 92055)	92055-055	1
BOLT,6X14 (Ref # 92151)	92151-1423	2

© 2026 Kawasaki Motors Corp., U.S.A.