1997 Vulcan 1500 Classic

PARTS DIAGRAM

Gasket Kit

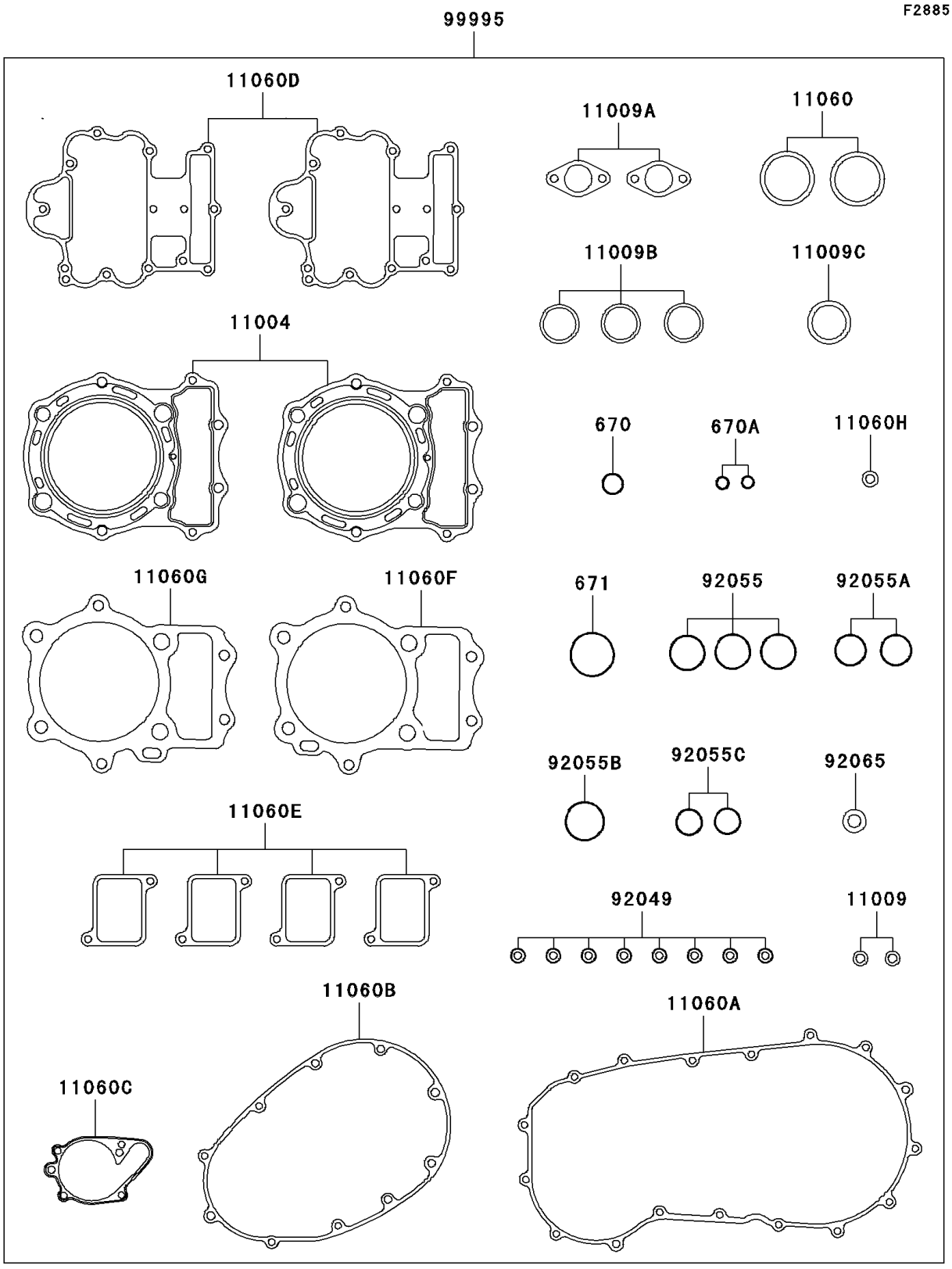

© 2026 Kawasaki Motors Corp., U.S.A.

1997 Vulcan 1500 Classic

PARTS LIST

Gasket Kit

ITEM NAME	PART NUMBER	QUANTITY
O RING,18MM (Ref # 670)	670B2018	1
O RING (Ref # 670A)	670D2010	2
O RING,40MM (Ref # 671)	671B2540	1
GASKET-HEAD (Ref # 11004)	11004-1317	2
GASKET,OIL PIPE,8.2X14X1.0 (Ref # 11009)	11009-1344	2
GASKET,TENSIONER (Ref # 11009A)	11009-1858	2
GASKET,MUFFLER CONNECTING (Ref # 11009B)	11009-1865	3
GASKET,EXHAUST HOLDER (Ref # 11009C)	11009-1894	1
GASKET,EXHAUST PIPE (Ref # 11060)	11060-1119	2
GASKET,CLUTCH COVER (Ref # 11060A)	11060-1121	1
GASKET,GENERATOR (Ref # 11060B)	11060-1122	1
GASKET,WATER PUMP COVER (Ref # 11060C)	11060-1124	1
GASKET,ROCKER CASE COVER (Ref # 11060D)	11060-1732	2
GASKET,REED VALVE CAP (Ref # 11060E)	11060-1733	4
GASKET,CYLINDER BASE,FR (Ref # 11060F)	11060-1737	1
GASKET,CYLINDER BASE,RR (Ref # 11060G)	11060-1738	1
GASKET,PIPE JOINT (Ref # 11060H)	11060-1739	1
SEAL-OIL,RV37129.5 (Ref # 92049)	92049-016	8
RING-O,31.5X2.6 (Ref # 92055)	92055-049	3
RING-O,27.7X1.9 (Ref # 92055A)	92055-1272	2
RING-O,35.2X2.4 (Ref # 92055B)	92055-1358	1
RING-O,TENSIONER (Ref # 92055C)	92055-1555	2
GASKET,12X22X2,DRAIN PLUG (Ref # 92065)	92065-097	1
GASKET-SET,VN1500D (Ref # 99995)	99995-1393	1

© 2026 Kawasaki Motors Corp., U.S.A.