1997 Vulcan 1500 Classic

PARTS DIAGRAM

Chassis Electrical Equipment

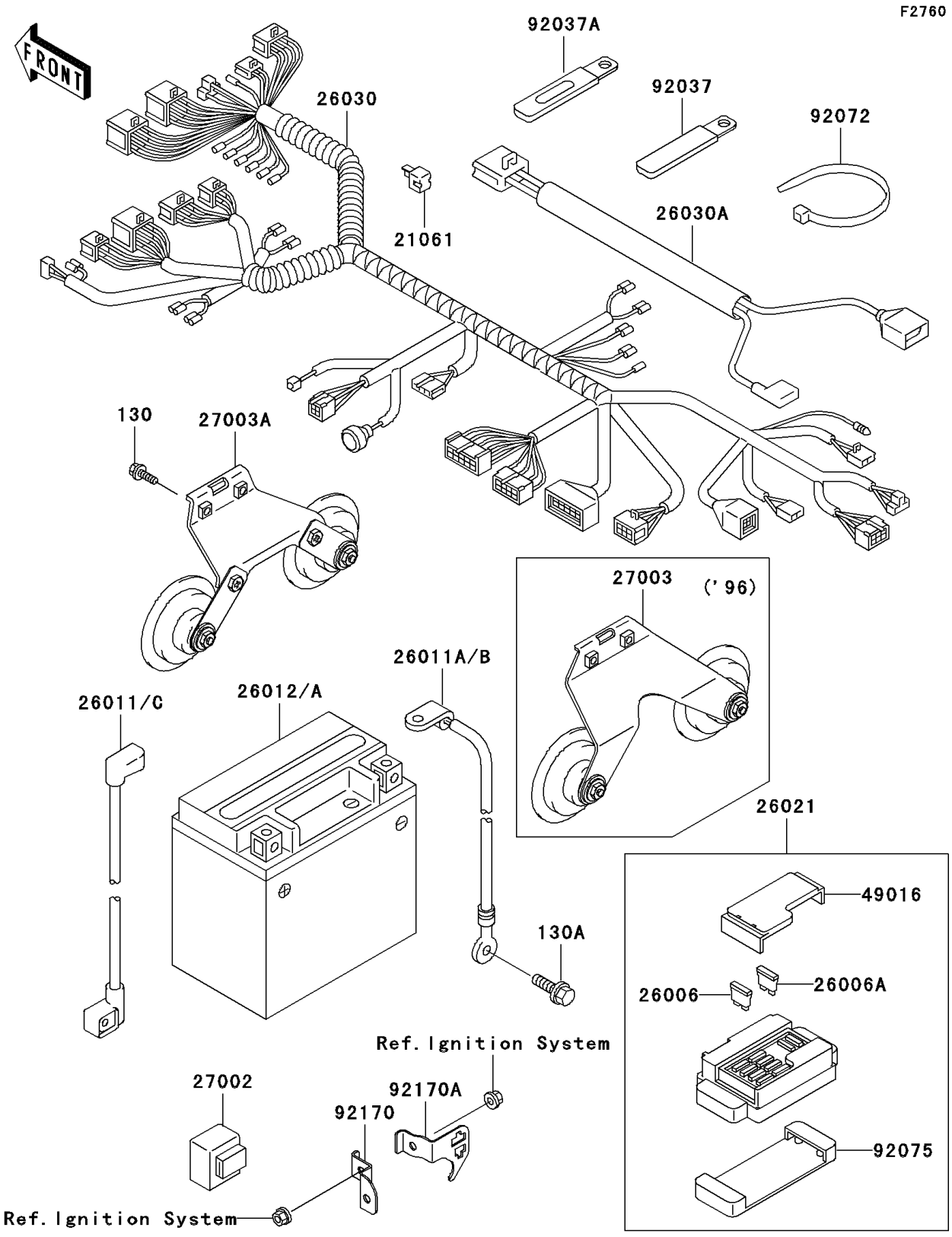

© 2026 Kawasaki Motors Corp., U.S.A.

1997 Vulcan 1500 Classic

PARTS LIST

Chassis Electrical Equipment

ITEM NAME	PART NUMBER	QUANTITY
BOLT-FLANGED,6X30,BLACK (Ref # 130)	130J0630	2
BOLT-FLANGED,6X10 (Ref # 130A)	130V0610	1
RECTIFIER (Ref # 21061)	21061-1003	2
FUSE,30A-G (Ref # 26006)	26006-1067	1
FUSE,10A-R (Ref # 26006A)	26006-1068	8
WIRE-LEAD,BATTERY(-) (Ref # 26011B)	26011-1662	1
WIRE-LEAD,BATTERY(+) (Ref # 26011C)	26011-1663	1
BATTERY,FTH16-BS,12V 14AH (Ref # 26012A)	26012-1357	1
JUNCTION BOX (Ref # 26021)	26021-1089	1
HARNESS,MAIN (Ref # 26030)	26030-1447	1
HARNESS,SUB (Ref # 26030A)	26030-1450	1
RELAY-ASSY (Ref # 27002)	27002-1092	1
HORN (Ref # 27003A)	27003-1406	1
COVER-SEAL,FUSE (Ref # 49016)	49016-1177	1
CLAMP,L=45 (Ref # 92037)	92037-1539	1
CLAMP (Ref # 92037A)	92037-1780	2
BAND,L=185 (Ref # 92072)	92072-1195	9
DAMPER,JUNCTION BOX (Ref # 92075)	92075-1688	1
CLAMP,IGNITION SWITCH (Ref # 92170)	92170-1699	1
CLAMP,RR BRAKE SWITCH (Ref # 92170A)	92170-1700	1

© 2026 Kawasaki Motors Corp., U.S.A.