1997 Vulcan 1500 Classic

PARTS DIAGRAM

Brake Pedal/Torque Link

F2260



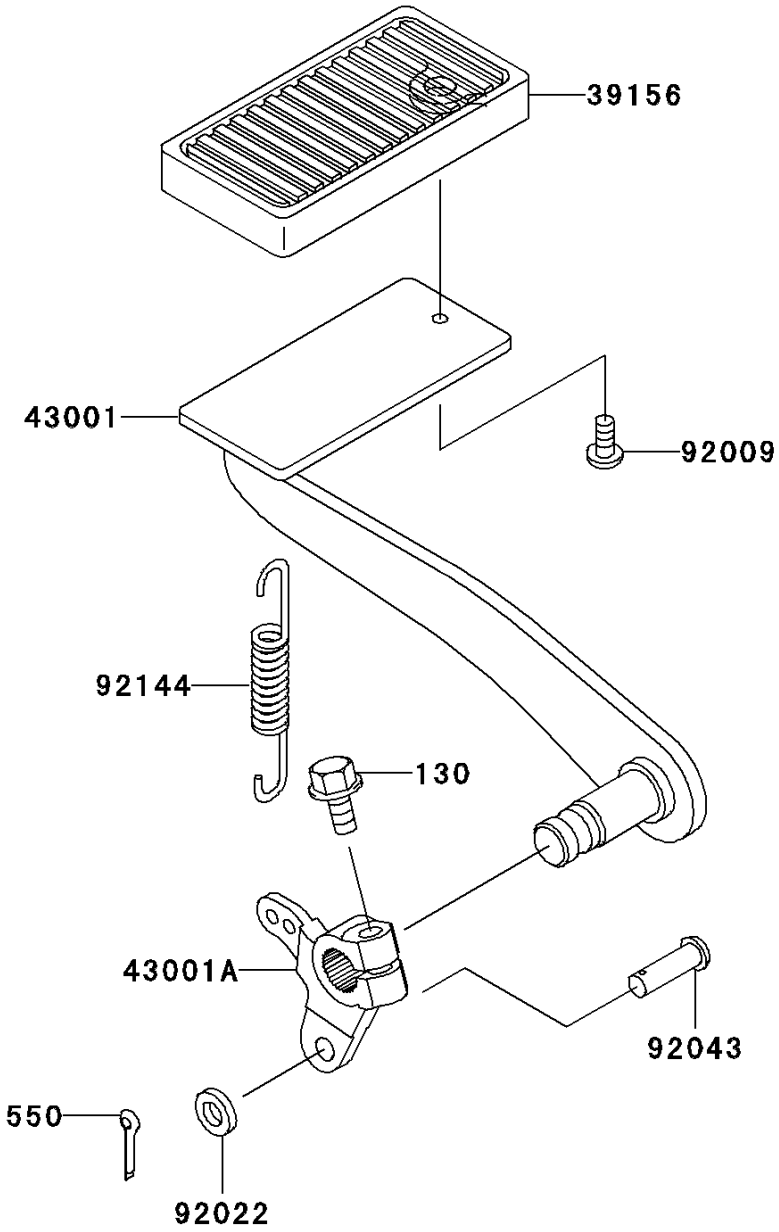

© 2026 Kawasaki Motors Corp., U.S.A.

1997 Vulcan 1500 Classic

PARTS LIST

Brake Pedal/Torque Link

ITEM NAME	PART NUMBER	QUANTITY
BOLT-FLANGED,8X25,BLACK (Ref # 130)	130J0825	1
PIN-COTTER,2.0X15 (Ref # 550)	550D2015	1
PAD,BRAKE PEDAL (Ref # 39156)	39156-1540	1
LEVER-BRAKE,PEDAL (Ref # 43001)	43001-1367	1
LEVER-BRAKE (Ref # 43001A)	43001-1368	1
SCREW,6X8,BLACK (Ref # 92009)	92009-1677	1
WASHER,8.5X16X1.2 (Ref # 92022)	92022-1582	1
PIN,8X16 (Ref # 92043)	92043-1013	1
SPRING,BRAKE PEDAL RETURN (Ref # 92144)	92144-1169	1

© 2026 Kawasaki Motors Corp., U.S.A.