1997 Vulcan 1500 Classic

PARTS DIAGRAM

Battery Case

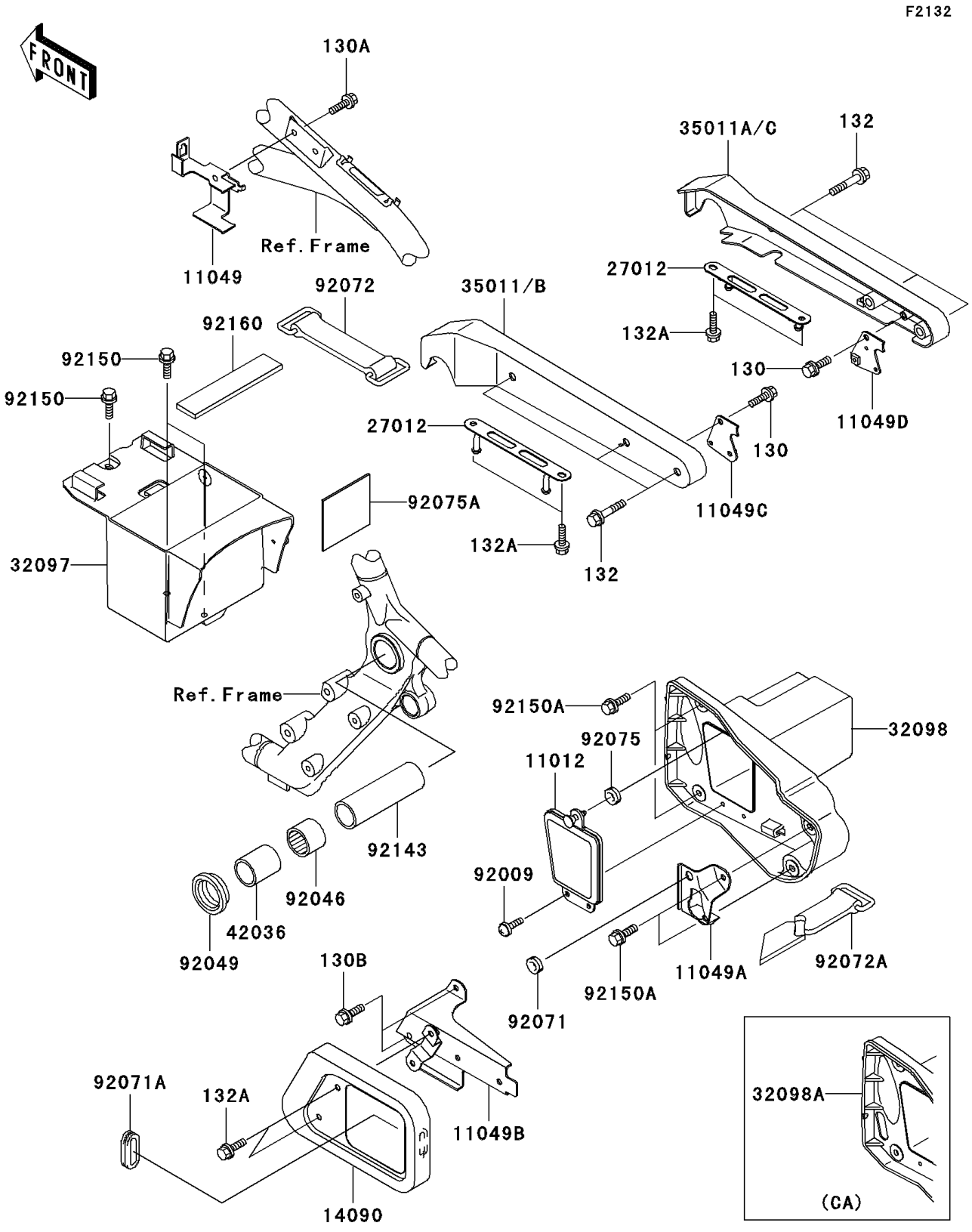

© 2026 Kawasaki Motors Corp., U.S.A.

1997 Vulcan 1500 Classic

PARTS LIST

Battery Case

ITEM NAME	PART NUMBER	QUANTITY
BOLT-FLANGED,6X12 (Ref # 130)	130H0612	2
BOLT-FLANGED (Ref # 130A)	130J0610	1
BOLT-FLANGED (Ref # 130B)	130J0612	2
BOLT-FLANGED-SMALL,8X45 (Ref # 132)	132E0845	6
BOLT-FLANGED-SMALL (Ref # 132A)	132J0612	6
CAP,TOOL CASE (Ref # 11012)	11012-1956	1
BRACKET,FUEL PUMP (Ref # 11049)	11049-1599	1
BRACKET,LOCK (Ref # 11049A)	11049-1600	1
BRACKET,REGULATOR (Ref # 11049B)	11049-1607	1
BRACKET,HELMET LOCK,LH (Ref # 11049C)	11049-1624	1
BRACKET,HELMET LOCK,RH (Ref # 11049D)	11049-1625	1
COVER,REGULATOR (Ref # 14090)	14090-1697	1
HOOK,BUNGEE CORD (Ref # 27012)	27012-1524	2
CASE-BATTERY (Ref # 32097)	32097-1161	1
STAY,REAR FENDER,LH (Ref # 35011B)	35011-1817	1
STAY,REAR FENDER,RH (Ref # 35011C)	35011-1818	1
SLEEVE,L=45 (Ref # 42036)	42036-1330	2
SCREW,TAPPING,5X14 (Ref # 92009)	92009-1635	2
BEARING-NEEDLE,BM2824 (Ref # 92046)	92046-1202	2
SEAL-OIL (Ref # 92049)	92049-1181	2
GROMMET (Ref # 92071)	92071-056	1
GROMMET (Ref # 92071A)	92071-1187	1
BAND,BATTERY,L=105 (Ref # 92072)	92072-1173	1
DAMPER (Ref # 92075)	92075-1629	1
DAMPER,BATTERY (Ref # 92075A)	92075-1864	1
COLLAR,20.2X27X90 (Ref # 92143)	92143-1878	1
BOLT,6X14 (Ref # 92150)	92150-1133	3
BOLT (Ref # 92150A)	92150-1198	4
DAMPER (Ref # 92160)	92160-1779	1

© 2026 Kawasaki Motors Corp., U.S.A.

1997 Vulcan 1500 Classic

PARTS LIST

Battery Case

ITEM NAME	PART NUMBER	QUANTITY
CASE-TOOL (Ref # 32098)	32098-1109	1
CASE-TOOL (Ref # 32098A)	32098-1111	1
BAND,L=470 (Ref # 92072A)	92072-1331	1

© 2026 Kawasaki Motors Corp., U.S.A.