1997 Vulcan 1500 Classic

PARTS DIAGRAM

Generator

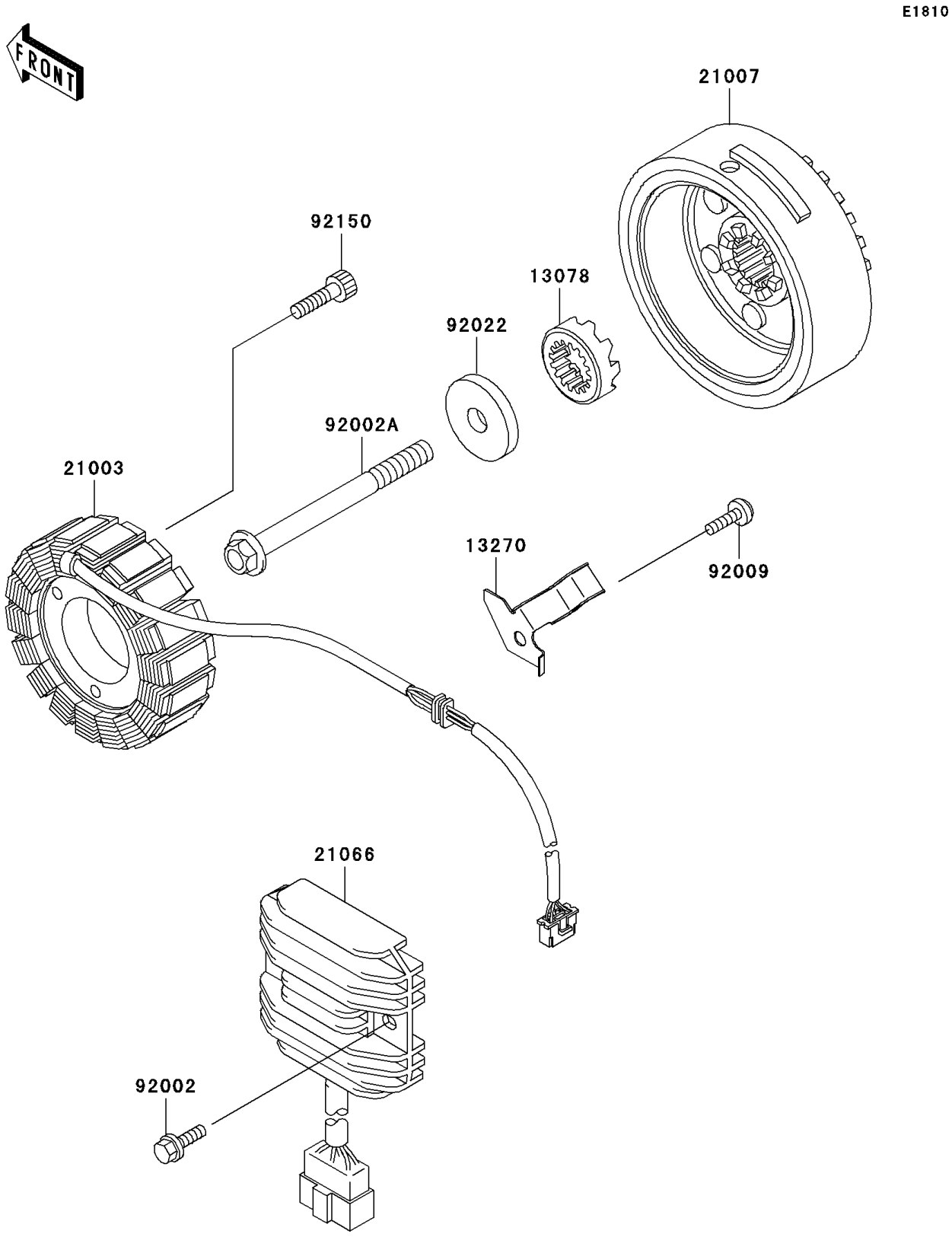

© 2026 Kawasaki Motors Corp., U.S.A.

1997 Vulcan 1500 Classic

PARTS LIST

Generator

ITEM NAME	PART NUMBER	QUANTITY
RATCHET (Ref # 13078)	13078-1056	1
PLATE (Ref # 13270)	13270-1727	1
STATOR (Ref # 21003)	21003-1301	1
ROTOR,GENERATOR (Ref # 21007)	21007-1308	1
REGULATOR-VOLTAGE (Ref # 21066)	21066-1106	1
BOLT,6X25 (Ref # 92002)	92002-1086	2
BOLT,GENERATOR,12X112 (Ref # 92002A)	92002-1901	1
SCREW (Ref # 92009)	92009-1768	1
WASHER,GENERATOR (Ref # 92022)	92022-1904	1
BOLT,SOCKET,6X35 (Ref # 92150)	92150-1484	3

© 2026 Kawasaki Motors Corp., U.S.A.