1997 Vulcan 1500 Classic

PARTS DIAGRAM

Gear Change Mechanism

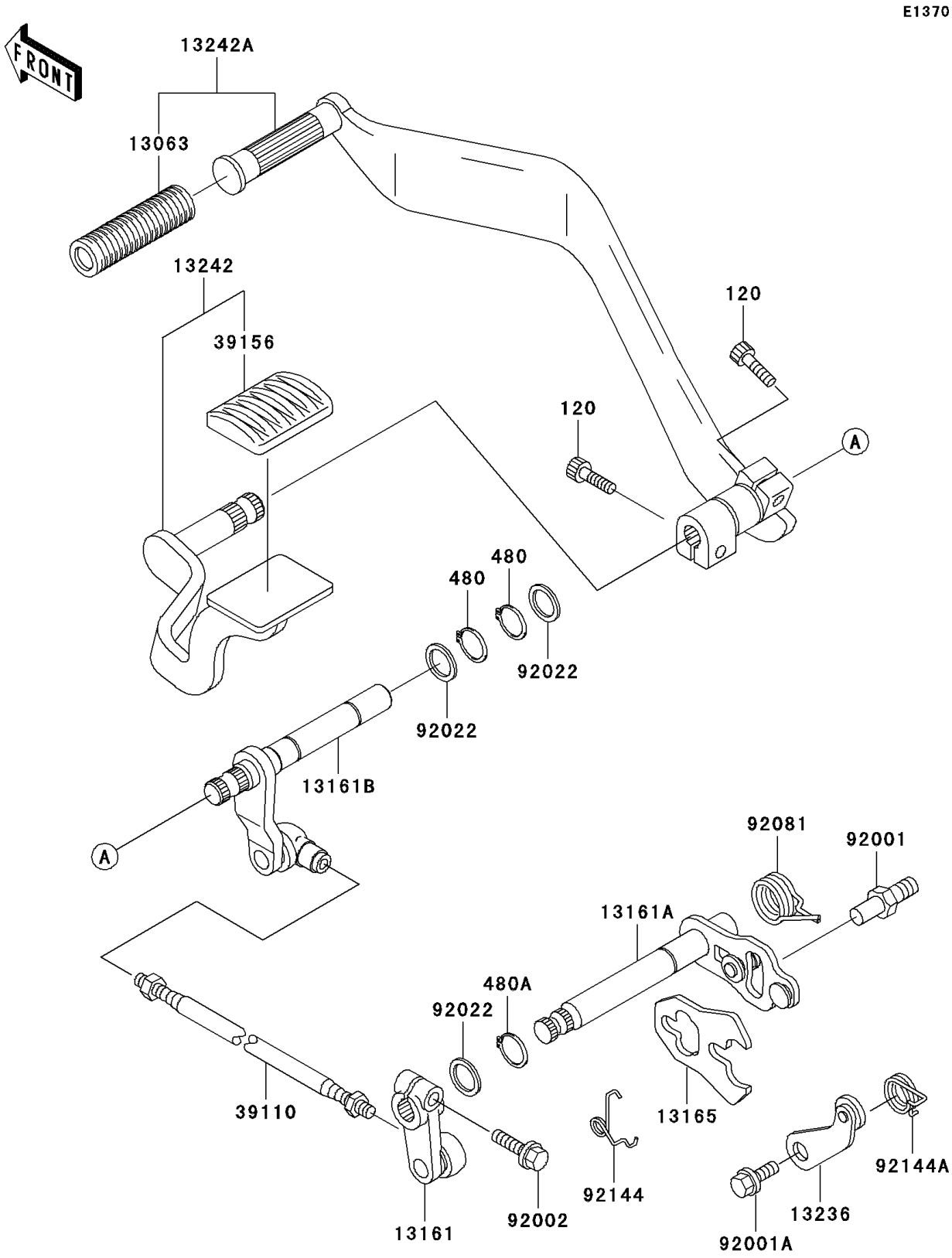

© 2026 Kawasaki Motors Corp., U.S.A.

1997 Vulcan 1500 Classic

PARTS LIST

Gear Change Mechanism

ITEM NAME	PART NUMBER	QUANTITY
BOLT-SOCKET (Ref # 120)	120Z0620	2
CIRCLIP-TYPE-C,12MM (Ref # 480)	480J1200	2
CIRCLIP-TYPE-C,13MM (Ref # 480A)	480J1300	1
DAMPER,PEDAL (Ref # 13063)	13063-002	1
LEVER-COMP-CHANGE SHAFT,RR (Ref # 13161)	13161-1142	1
LEVER-COMP-CHANGE SHAFT (Ref # 13161A)	13161-1150	1
LEVER-COMP-CHANGE SHAFT,FR (Ref # 13161B)	13161-1241	1
PAWL (Ref # 13165)	13165-1120	1
LEVER-COMP,POSITION (Ref # 13236)	13236-1126	1
LEVER-ASSY-CHANGE,PEDAL,RR (Ref # 13242)	13242-1341	1
LEVER-ASSY-CHANGE,PEDAL,FR (Ref # 13242A)	13242-1343	1
ROD-ASSY-TIE (Ref # 39110)	39110-1073	1
PAD,BRAKE PEDAL (Ref # 39156)	39156-1071	1
BOLT,RETURN SPRING (Ref # 92001)	92001-1455	1
BOLT,GEAR CHANGE LEVER (Ref # 92001A)	92001-1715	1
BOLT,6X20 (Ref # 92002)	92002-1237	1
WASHER,13.2X20X0.5 (Ref # 92022)	92022-1224	3
SPRING,CHANGE PEDAL RETURN (Ref # 92081)	92081-1869	1
SPRING (Ref # 92144)	92144-1029	1
SPRING,RETURN (Ref # 92144A)	92144-1140	1

© 2026 Kawasaki Motors Corp., U.S.A.