1996 Vulcan 1500 Classic

PARTS DIAGRAM

Gear Change Drum/Shift Fork(s)

Kawasaki
Let the Good Times Roll®

E1362

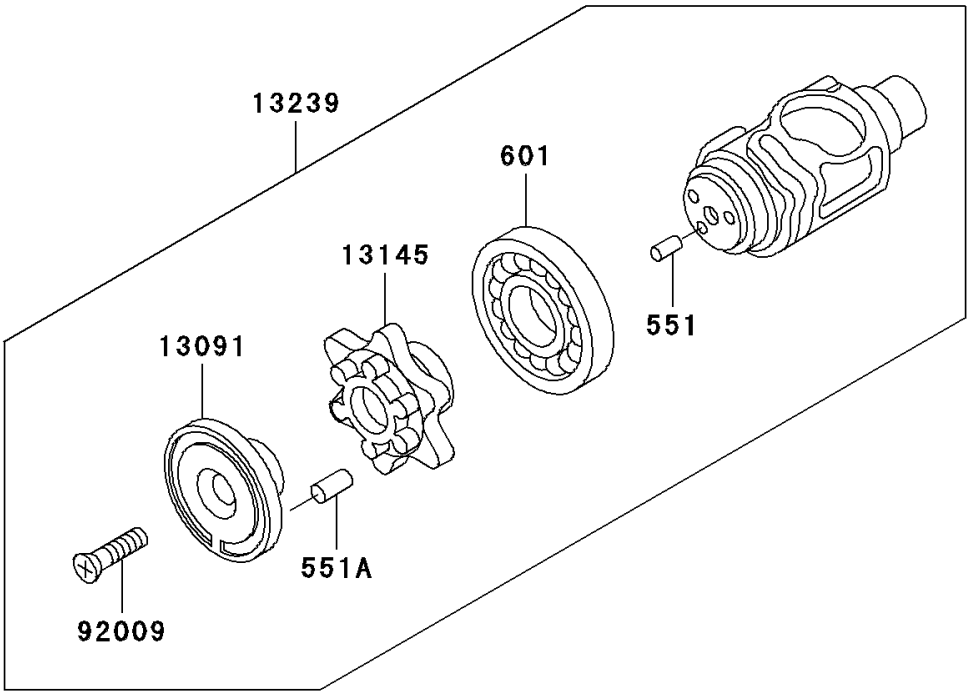

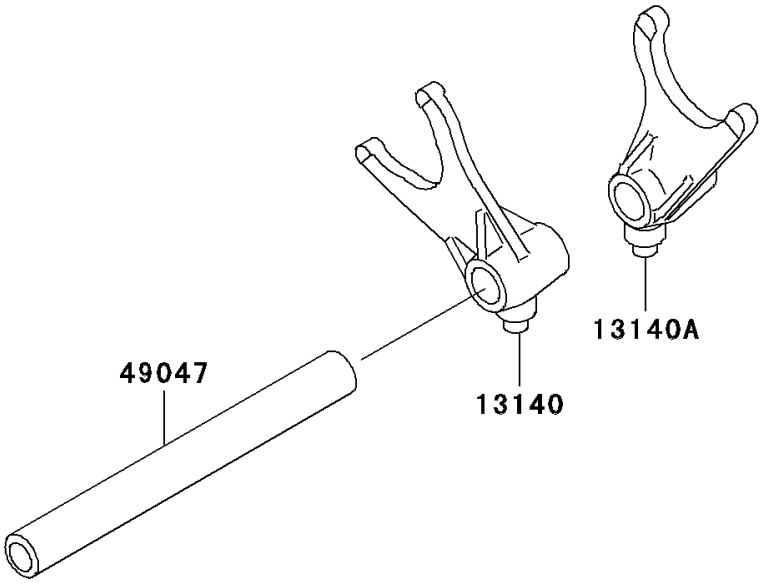

© 2026 Kawasaki Motors Corp., U.S.A.

1996 Vulcan 1500 Classic

PARTS LIST

Gear Change Drum/Shift Fork(s)

Kawasaki
Let the Good Times Roll®

ITEM NAME	PART NUMBER	QUANTITY
PIN-DOWEL,4X8 (Ref # 551)	551A0408	1
PIN-DOWEL (Ref # 551A)	551A0412	1
BEARING-BALL (Ref # 601)	601A6005	1
HOLDER,CHANGE DRUM PIN (Ref # 13091)	13091-1104	1
FORK-SHIFT,INPUT,2ND (Ref # 13140)	13140-1155	1
FORK-SHIFT,OUTPUT,3RD (Ref # 13140A)	13140-1258	1
CAM-CHANGE DRUM (Ref # 13145)	13145-1062	1
DRUM-ASSY-CHANGE (Ref # 13239)	13239-1141	1
ROD-SHIFT (Ref # 49047)	49047-1062	1
SCREW,6X45 (Ref # 92009)	92009-1599	1

© 2026 Kawasaki Motors Corp., U.S.A.