1989 Vulcan 88 SE

PARTS DIAGRAM

Headlight(s)

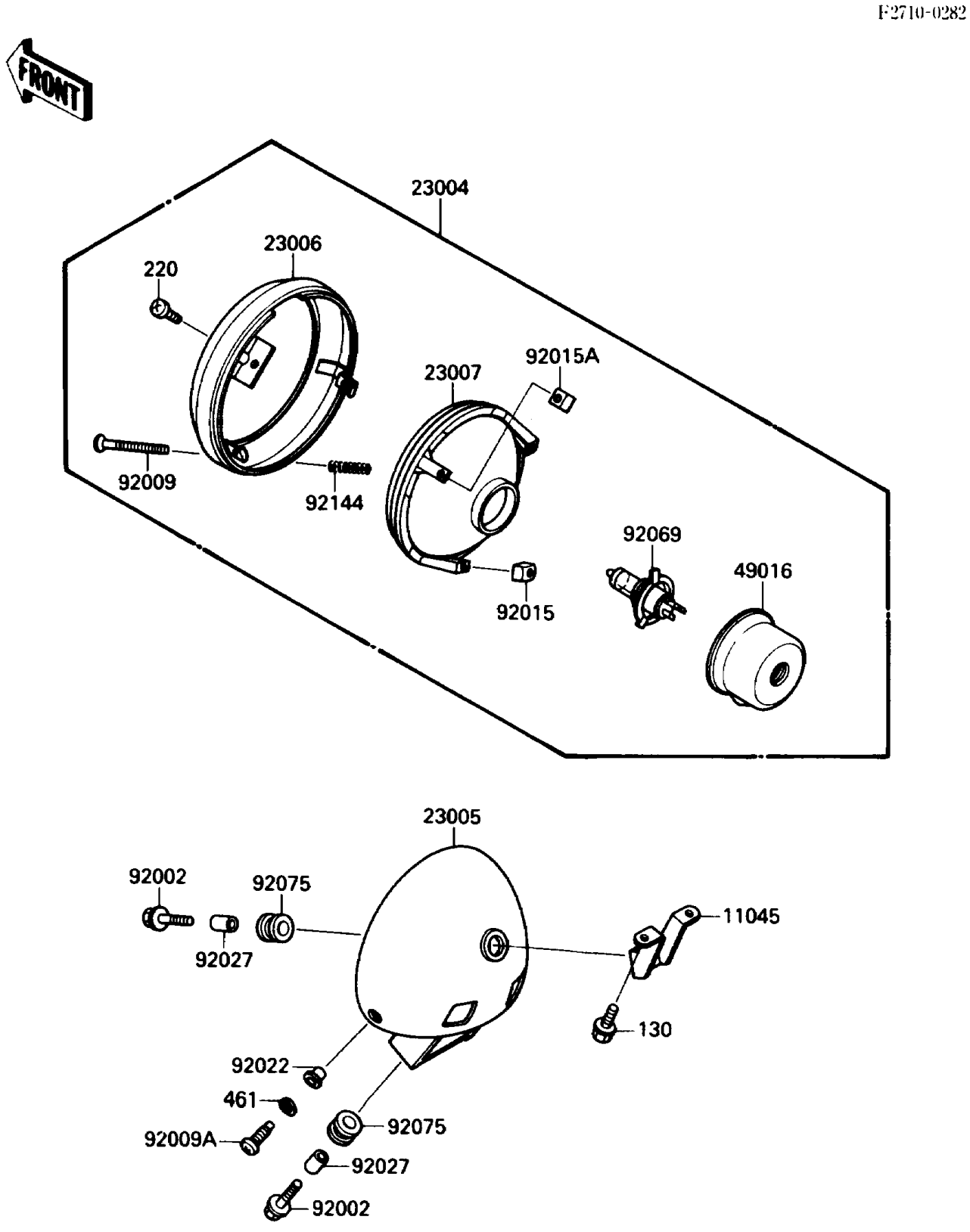

© 2026 Kawasaki Motors Corp., U.S.A.

1989 Vulcan 88 SE

PARTS LIST

Headlight(s)

ITEM NAME	PART NUMBER	QUANTITY
BRACKET,HEAD LAMP (Ref # 11045)	11045-1598	1
LAMP-HEAD (Ref # 23004)	23004-1221	1
BODY-COMP-HEAD LAMP (Ref # 23005)	23005-1083	1
RIM-LAMP (Ref # 23006)	23006-1059	1
LENS-COMP,HEAD LAMP (Ref # 23007)	23007-1169	1
COVER-SEAL,HEAD LAMP SOCKET (Ref # 49016)	49016-1129	1
BOLT,6X25 (Ref # 92002)	92002-1135	3
SCREW,FOCUS ADJUST,4X65 (Ref # 92009)	92009-1472	2
SCREW,5MM (Ref # 92009A)	92011-024	2
NUT,4MM,FOCUS ADJUST (Ref # 92015)	23020-018	2
NUT,5MM (Ref # 92015A)	92015-1157	1
WASHER (Ref # 92022)	23021-010	2
COLLAR,6.8X10X14.5 (Ref # 92027)	92027-156	3
BULB,12V 60/55W,H4 (Ref # 92069)	92069-1002	1
DAMPER (Ref # 92075)	92075-1035	3
SPRING,FOCUS ADJUST (Ref # 92144)	92144-1149	2
BOLT-FLANGED (Ref # 130)	130D0612	2
SCREW-PAN-CROS,5X12 (Ref # 220)	220D0512	1
WASHER-SPRING,5MM (Ref # 461)	461F0500	2

© 2026 Kawasaki Motors Corp., U.S.A.