1988 Vulcan 88 SE

PARTS DIAGRAM

Water Pump

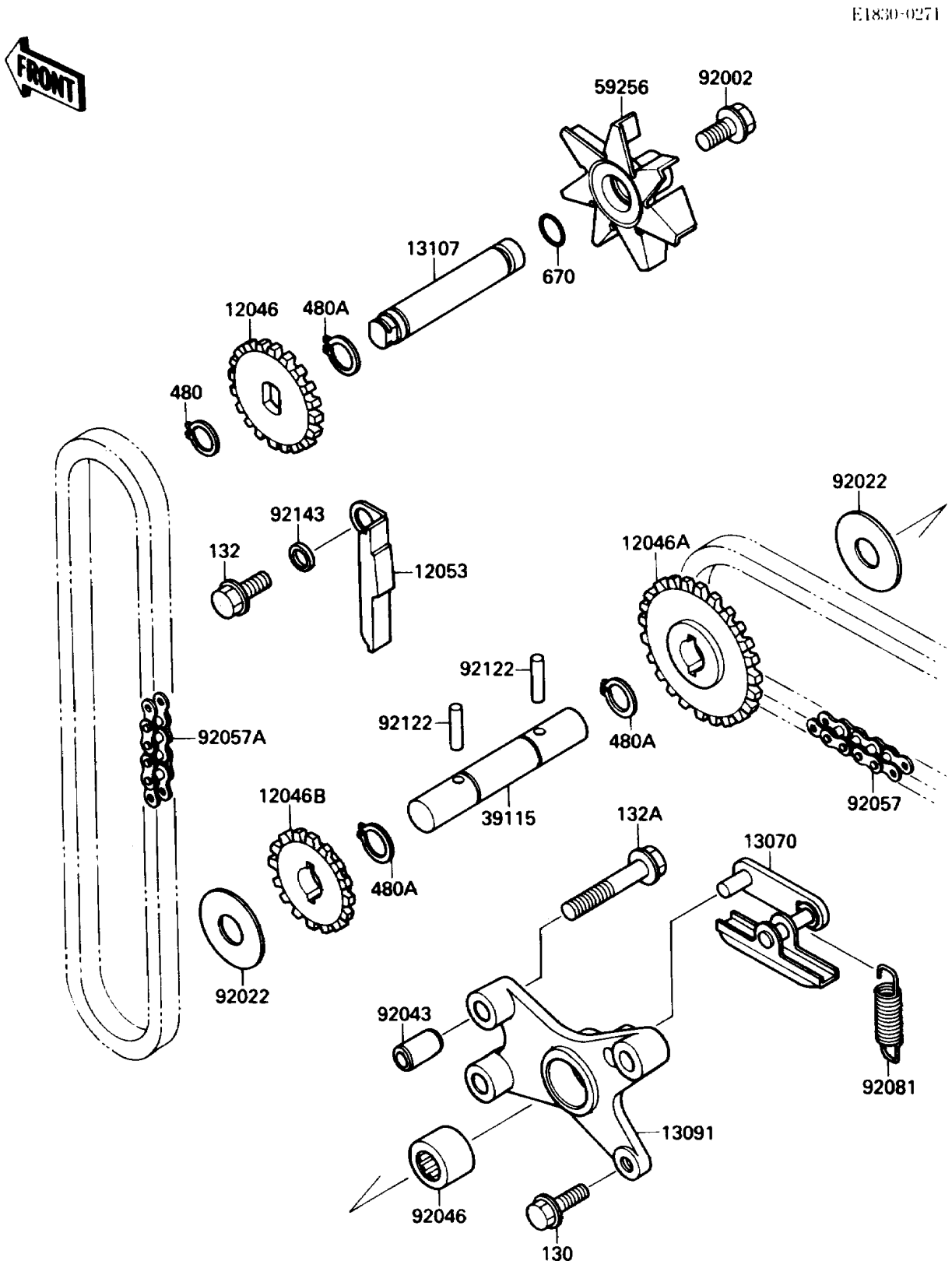

© 2026 Kawasaki Motors Corp., U.S.A.

1988 Vulcan 88 SE

PARTS LIST

Water Pump

ITEM NAME	PART NUMBER	QUANTITY
SPROCKET,OIL PUMP,19T (Ref # 12046)	12046-1079	1
SPROCKET,CRANK IDLER,25T (Ref # 12046A)	12046-1096	1
SPROCKET,IDLER,17T (Ref # 12046B)	12046-1097	1
GUIDE-CHAIN (Ref # 12053)	12053-1227	1
GUIDE (Ref # 13070)	13070-1178	1
HOLDER (Ref # 13091)	13091-1471	1
SHAFT,IMPELLER (Ref # 13107)	13107-1196	1
SHAFT-IDLER (Ref # 39115)	39115-1058	1
IMPELLER (Ref # 59256)	59256-1066	1
BOLT,6X12 (Ref # 92002)	92002-1902	1
WASHER,12X27.5X1.0 (Ref # 92022)	92022-1852	2
PIN,6.2X8X14 (Ref # 92043)	92043-1263	2
BEARING-NEEDLE,HK1212 (Ref # 92046)	92046-1163	1
CHAIN,BS25HX46L (Ref # 92057)	92057-1230	1
CHAIN,BS25HX44L (Ref # 92057A)	92057-1231	1
SPRING,IDLER SHAFT (Ref # 92081)	92081-1791	1
ROLLER,3X15.8 (Ref # 92122)	92122-1126	2
COLLAR (Ref # 92143)	92143-1123	1
BOLT-FLANGED (Ref # 130)	130D0514	1
BOLT-FLANGED-SMALL (Ref # 132)	132E0612	1
BOLT-FLANGED-SMALL (Ref # 132A)	132E0635	3
CIRCLIP-TYPE-C,11MM (Ref # 480)	480J1100	1
CIRCLIP-TYPE-C,12MM (Ref # 480A)	480J1200	3
O RING,9MM (Ref # 670)	670D1509	1

© 2026 Kawasaki Motors Corp., U.S.A.