2013 Ninja® 300 ABS

PARTS DIAGRAM

Front Wheel(BDF-BEF)

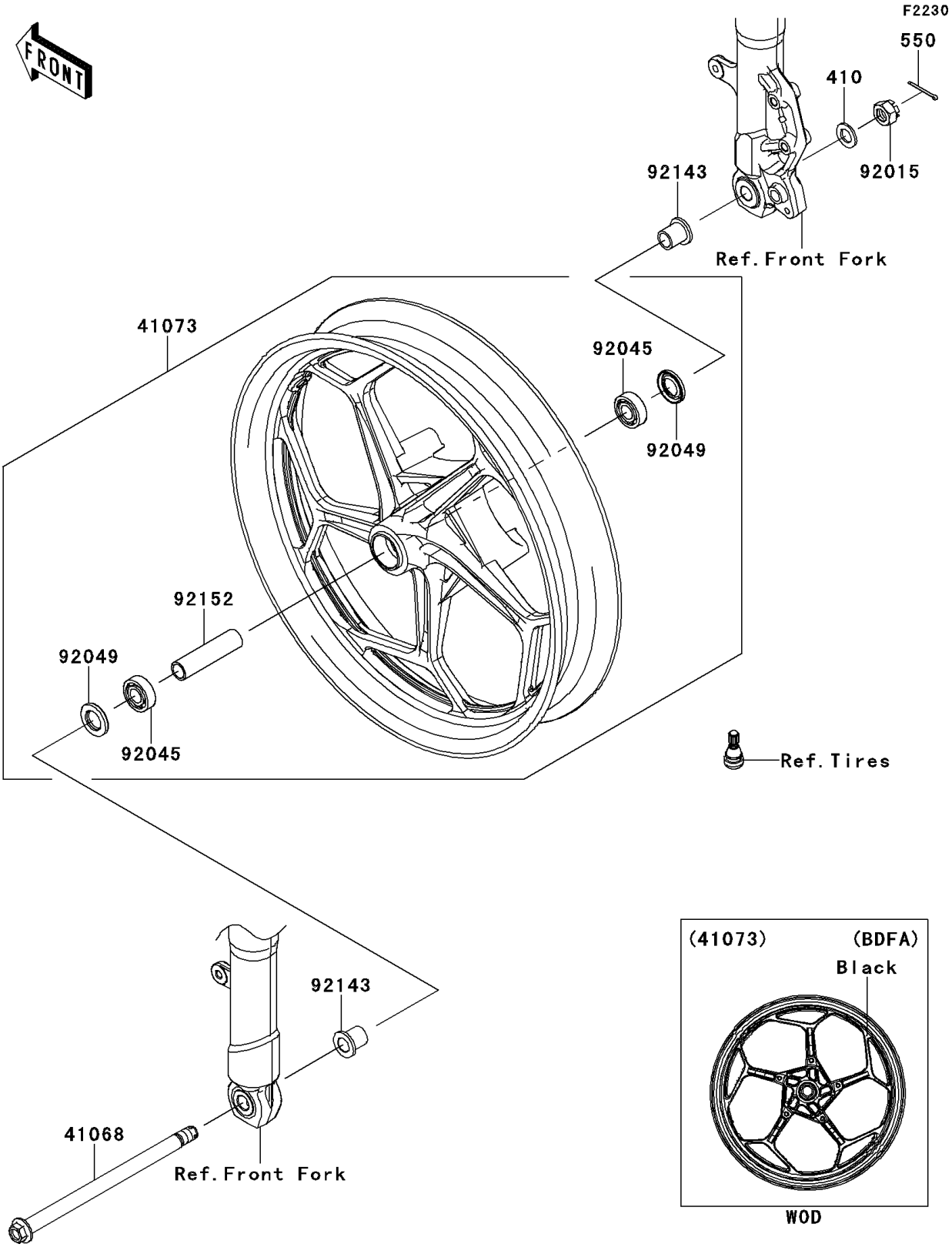

© 2026 Kawasaki Motors Corp., U.S.A.

2013 Ninja® 300 ABS

PARTS LIST

Front Wheel(BDF-BEF)

ITEM NAME	PART NUMBER	QUANTITY
AXLE,FR (Ref # 41068)	41068-0024	1
WHEEL-ASSY,FR,BLACK (Ref # 41073)	41073-0589-R2	1
NUT,CASTLE,14MM (Ref # 92015)	92015-1765	1
BEARING-BALL,15X35X11 (Ref # 92045)	92045-0734	2
SEAL-OIL (Ref # 92049)	92049-0136	2
COLLAR,FR AXLE,L=24 (Ref # 92143)	92143-1187	2
COLLAR,15.1X20X80 (Ref # 92152)	92152-1586	1
WASHER-PLAIN-SMALL,14MM (Ref # 410)	410AA1400	1
PIN-COTTER,3.0X30 (Ref # 550)	550AA3030	1

© 2026 Kawasaki Motors Corp., U.S.A.