2014 NINJA® 300 ABS SE

PARTS DIAGRAM

Fuel Injection

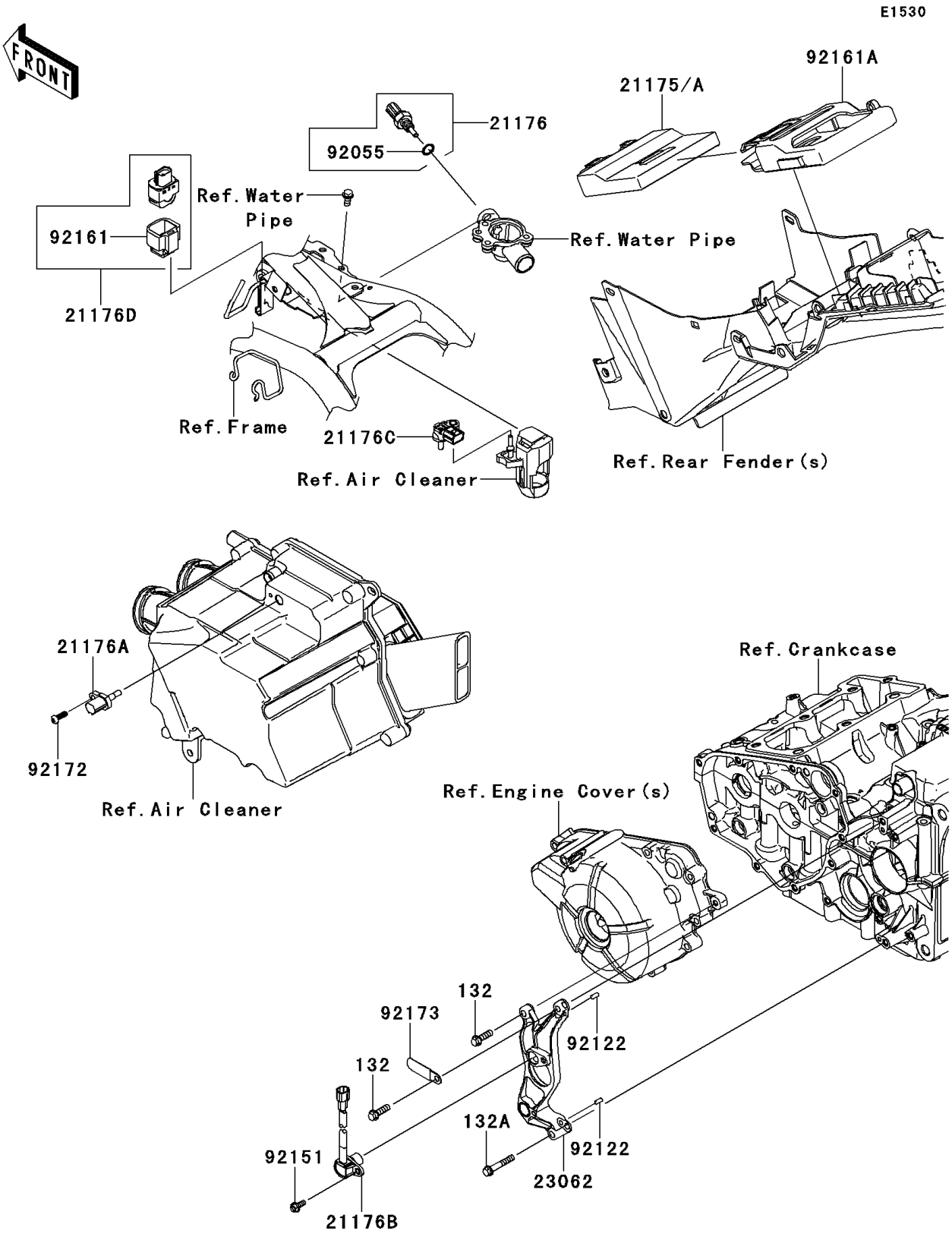

© 2026 Kawasaki Motors Corp., U.S.A.

2014 NINJA® 300 ABS SE

PARTS LIST

Fuel Injection

ITEM NAME	PART NUMBER	QUANTITY
CONTROL UNIT-ELECTRONIC (Ref # 21175A)	21175-0854	1
SENSOR,WATER TEMP (Ref # 21176)	21176-0009	1
SENSOR,AIR TEMPERATURE (Ref # 21176A)	21176-0048	1
SENSOR,SPEED (Ref # 21176B)	21176-0065	1
SENSOR,PRESSURE (Ref # 21176C)	21176-0111	1
SENSOR,VEHICLE-DOWN (Ref # 21176D)	21176-0704	1
BRACKET-COMP (Ref # 23062)	23062-0741	1
RING-O,9.5X1.9 (Ref # 92055)	92055-0016	1
ROLLER,4X8 (Ref # 92122)	92122-0557	2
BOLT,FLANGED,5X12 (Ref # 92151)	92151-1305	1
DAMPER (Ref # 92161)	92161-0951	1
DAMPER,ECU (Ref # 92161A)	92161-1426	1
SCREW,TAPPING,5X16 (Ref # 92172)	92172-0790	1
CLAMP,L=45 (Ref # 92173)	92173-0194	1
BOLT-FLANGED-SMALL,6X20 (Ref # 132)	132BA0620	2
BOLT-FLANGED-SMALL,6X35 (Ref # 132A)	132BA0635	1

© 2026 Kawasaki Motors Corp., U.S.A.