2013 NINJA® 1000 ABS

PARTS DIAGRAM

Brake Pedal/Torque Link

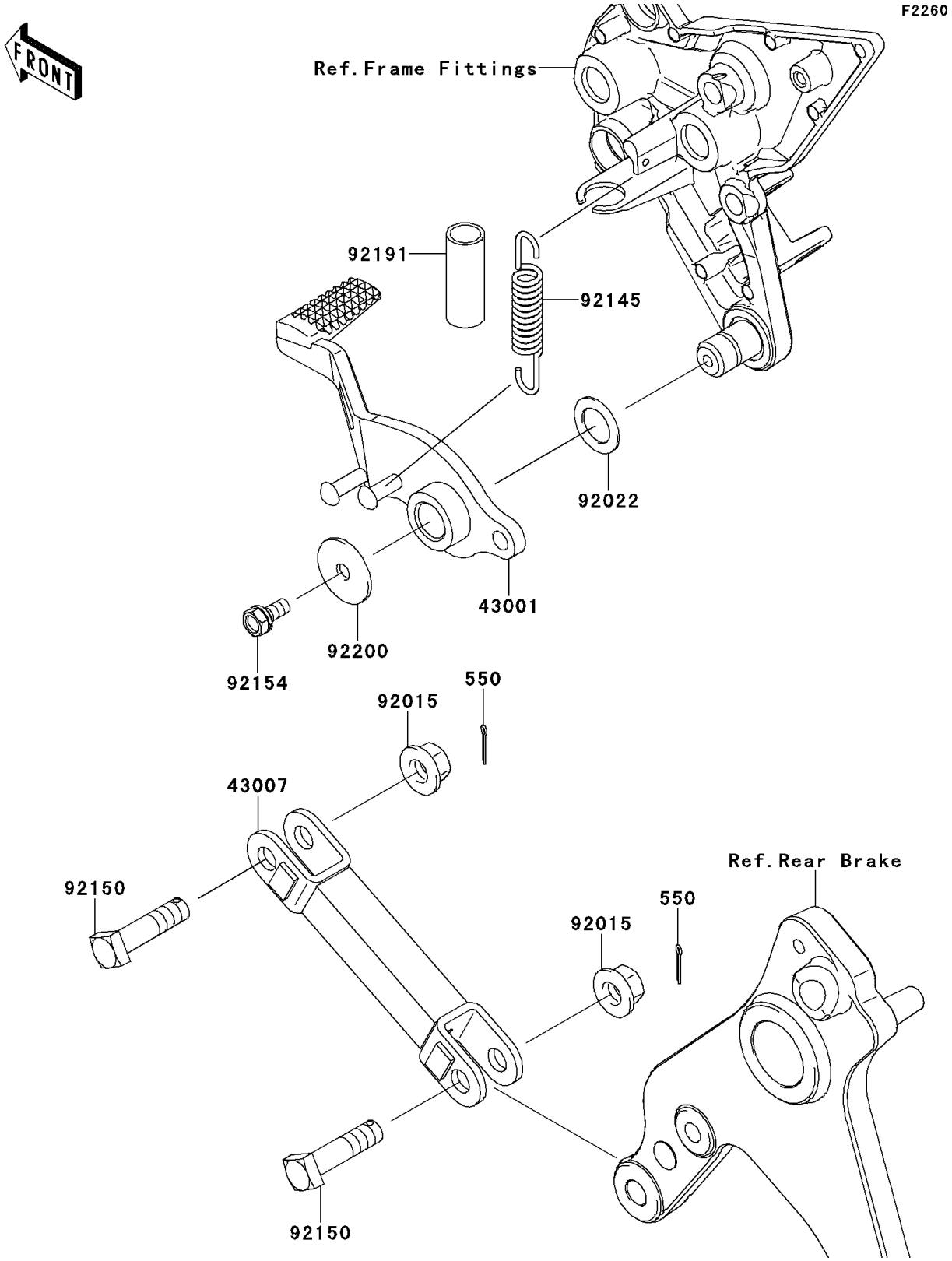

© 2026 Kawasaki Motors Corp., U.S.A.

2013 NINJA® 1000 ABS

PARTS LIST

Brake Pedal/Torque Link

ITEM NAME	PART NUMBER	QUANTITY
LEVER-BRAKE (Ref # 43001)	43001-0712	1
ROD-TORQUE,F.S.BLACK (Ref # 43007)	43007-0016-18R	1
NUT,FLANGED,10MM (Ref # 92015)	92015-1415	2
WASHER,15.3X24X1 (Ref # 92022)	92022-326	1
SPRING,BRAKE LEVER (Ref # 92145)	92145-0764	1
BOLT,10X39.5 (Ref # 92150)	92150-1598	2
BOLT,UPSET-WS,6X14 (Ref # 92154)	92154-0293	1
TUBE,12X15X40 (Ref # 92191)	92191-1739	1
WASHER,7X28X1.6 (Ref # 92200)	92200-0279	1
PIN-COTTER,2.0X15 (Ref # 550)	550AA2015	2

© 2026 Kawasaki Motors Corp., U.S.A.