2013 VERSYS®

PARTS DIAGRAM

Seat Cover

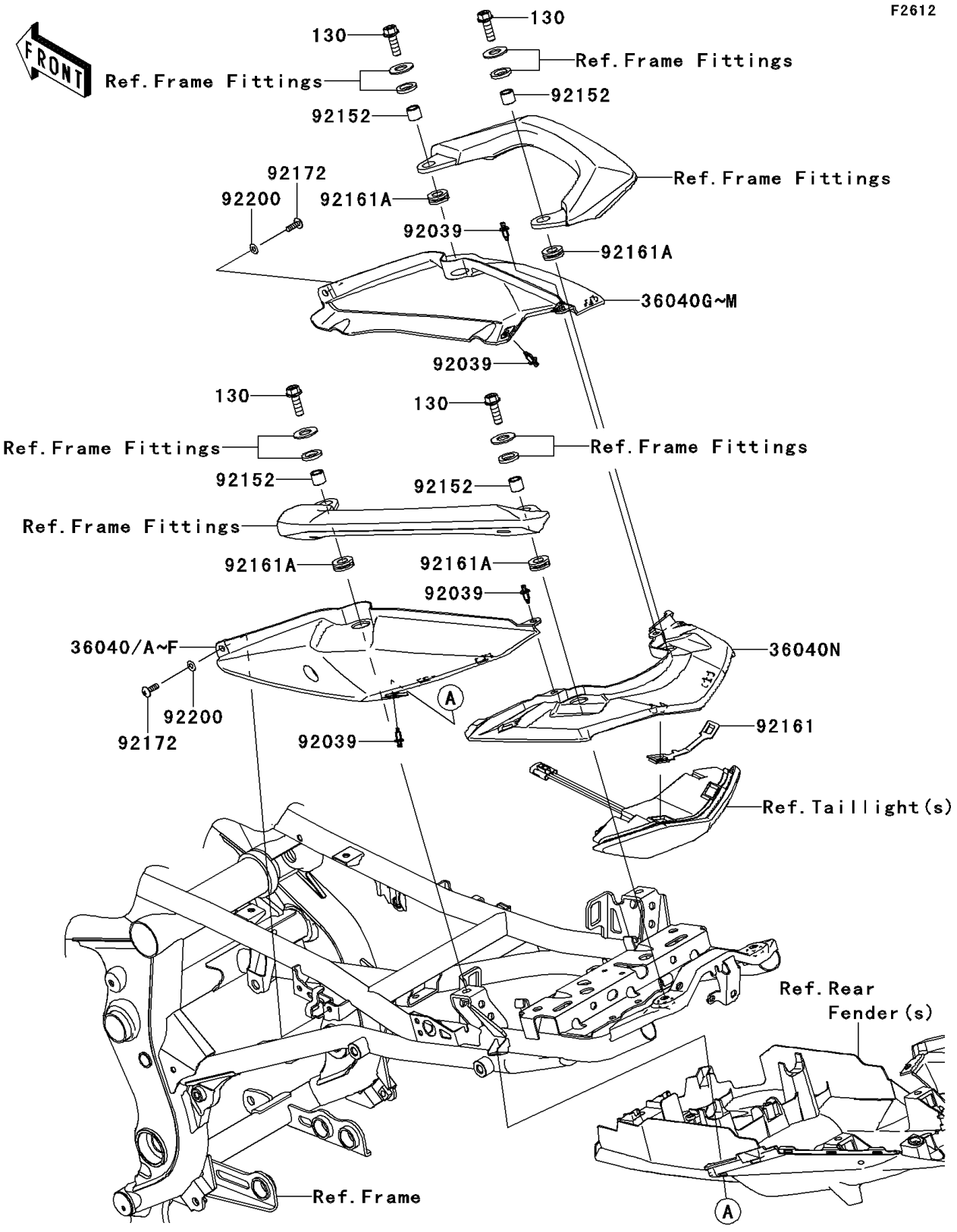

© 2026 Kawasaki Motors Corp., U.S.A.

2013 VERSYS®

PARTS LIST

Seat Cover

ITEM NAME	PART NUMBER	QUANTITY
COVER-TAIL,LH,P.S.WHITE (Ref # 36040A)	36040-0096-15S	1
COVER-TAIL,LH,M.M.GRAY (Ref # 36040D)	36040-0096-35J	1
COVER-TAIL,LH,C.T.BLUE (Ref # 36040E)	36040-0096-620	1
COVER-TAIL,RH,P.S.WHITE (Ref # 36040H)	36040-0097-15S	1
COVER-TAIL,RH,M.M.GRAY (Ref # 36040K)	36040-0097-35J	1
COVER-TAIL,RH,C.T.BLUE (Ref # 36040L)	36040-0097-620	1
COVER-TAIL,CNT (Ref # 36040N)	36040-0111	1
RIVET (Ref # 92039)	92039-0023	4
COLLAR,9.2X13.8X12.5 (Ref # 92152)	92152-0546	4
DAMPER,TAIL LAMP (Ref # 92161)	92161-0808	1
DAMPER (Ref # 92161A)	92161-0868	4
SCREW,5X16 (Ref # 92172)	92172-0322	2
WASHER,NYLON,5.3X11.5X0.5 (Ref # 92200)	92200-1480	2
BOLT-FLANGED,8X30 (Ref # 130)	130CA0830	4

© 2026 Kawasaki Motors Corp., U.S.A.