2013 VERSYS®

PARTS DIAGRAM

Meter(s)

F2530

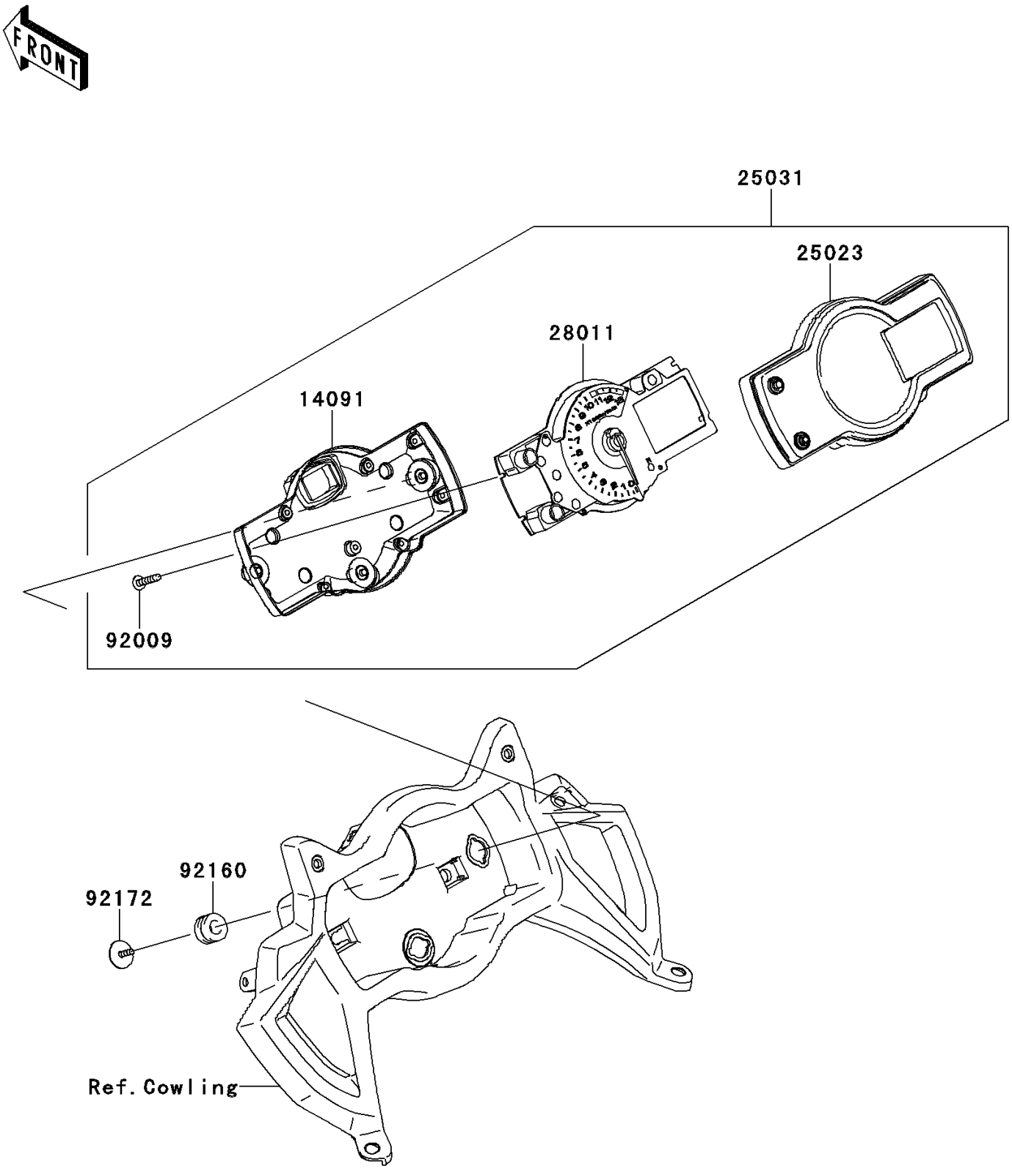

© 2026 Kawasaki Motors Corp., U.S.A.

2013 VERSYS®

PARTS LIST

Meter(s)

ITEM NAME	PART NUMBER	QUANTITY
COVER,METER,LWR (Ref # 14091)	14091-0864	1
COVER-METER CASE,UPP (Ref # 25023)	25023-0023	1
METER-ASSY,TACHO&LCD (Ref # 25031)	25031-0347	1
METER,TACHO&LCD (Ref # 28011)	28011-0175	1
SCREW,TAPPING,3X16 (Ref # 92009)	92009-1164	9
DAMPER (Ref # 92160)	92160-1167	3
SCREW,TAPPING,WP,5X14 (Ref # 92172)	92172-0441	3

© 2026 Kawasaki Motors Corp., U.S.A.