2022 Z900 SE

PARTS DIAGRAM

Seat Cover

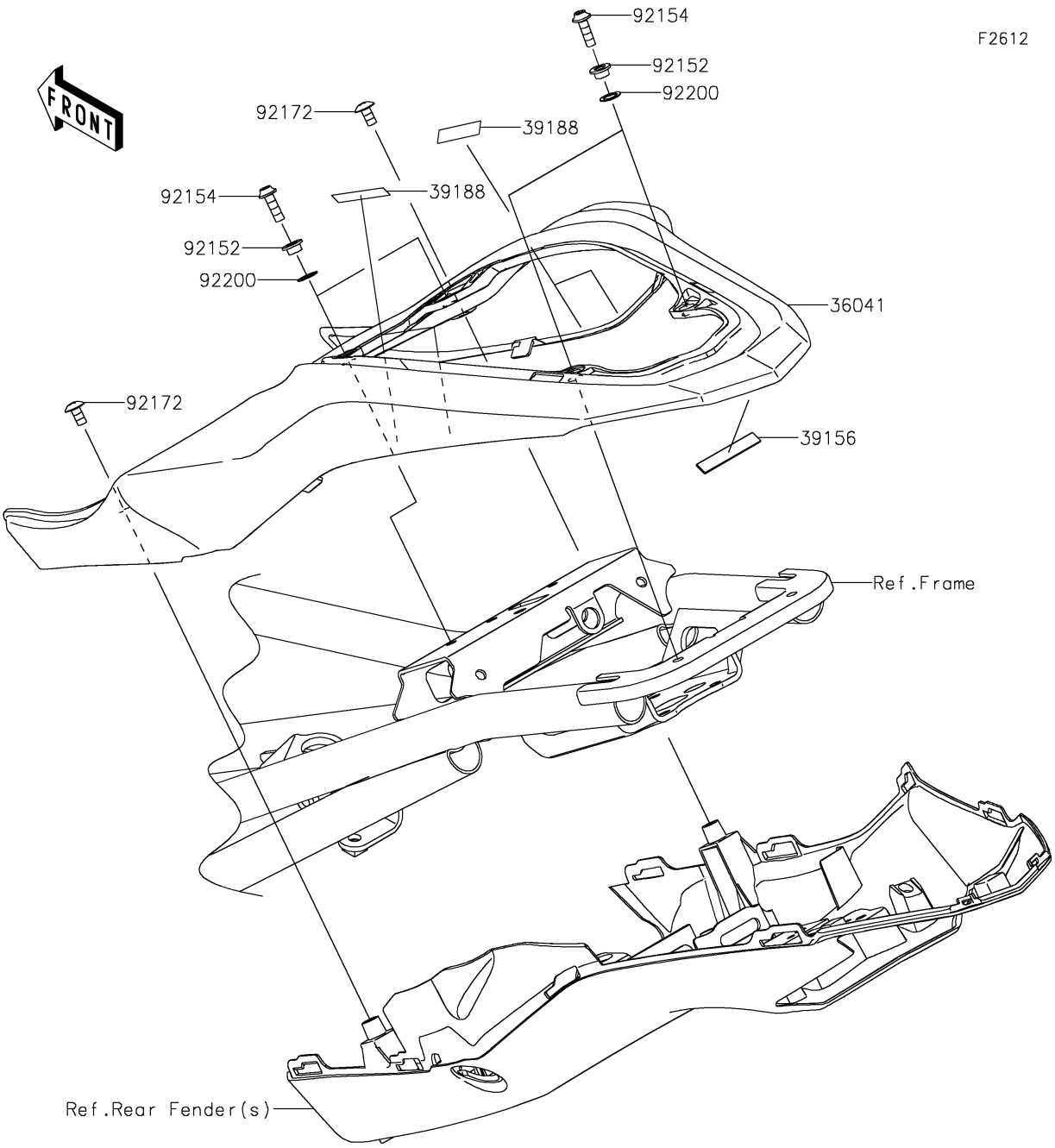

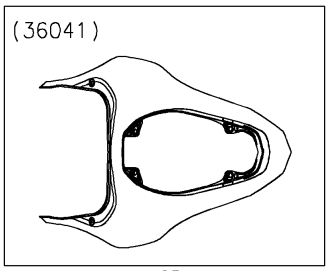

WOD

© 2026 Kawasaki Motors Corp., U.S.A.

2022 Z900 SE

PARTS LIST

Seat Cover

ITEM NAME	PART NUMBER	QUANTITY
COVER-TAIL,M.S.BLACK (Ref # 36041)	36041-0053-660	1
PAD,7X44X1 (Ref # 39156)	39156-2181	1
TAPE,8X35 (Ref # 39188)	39188-0564	4
COLLAR,5.6X8X5 (Ref # 92152)	92152-2339	4
BOLT,SOCKET,5X16 (Ref # 92154)	92154-4294	4
SCREW,5X10 (Ref # 92172)	92172-1194	2
WASHER,8.2X12X0.5 (Ref # 92200)	92200-1887	4

© 2026 Kawasaki Motors Corp., U.S.A.