2022 Z900 SE

PARTS DIAGRAM

Seat

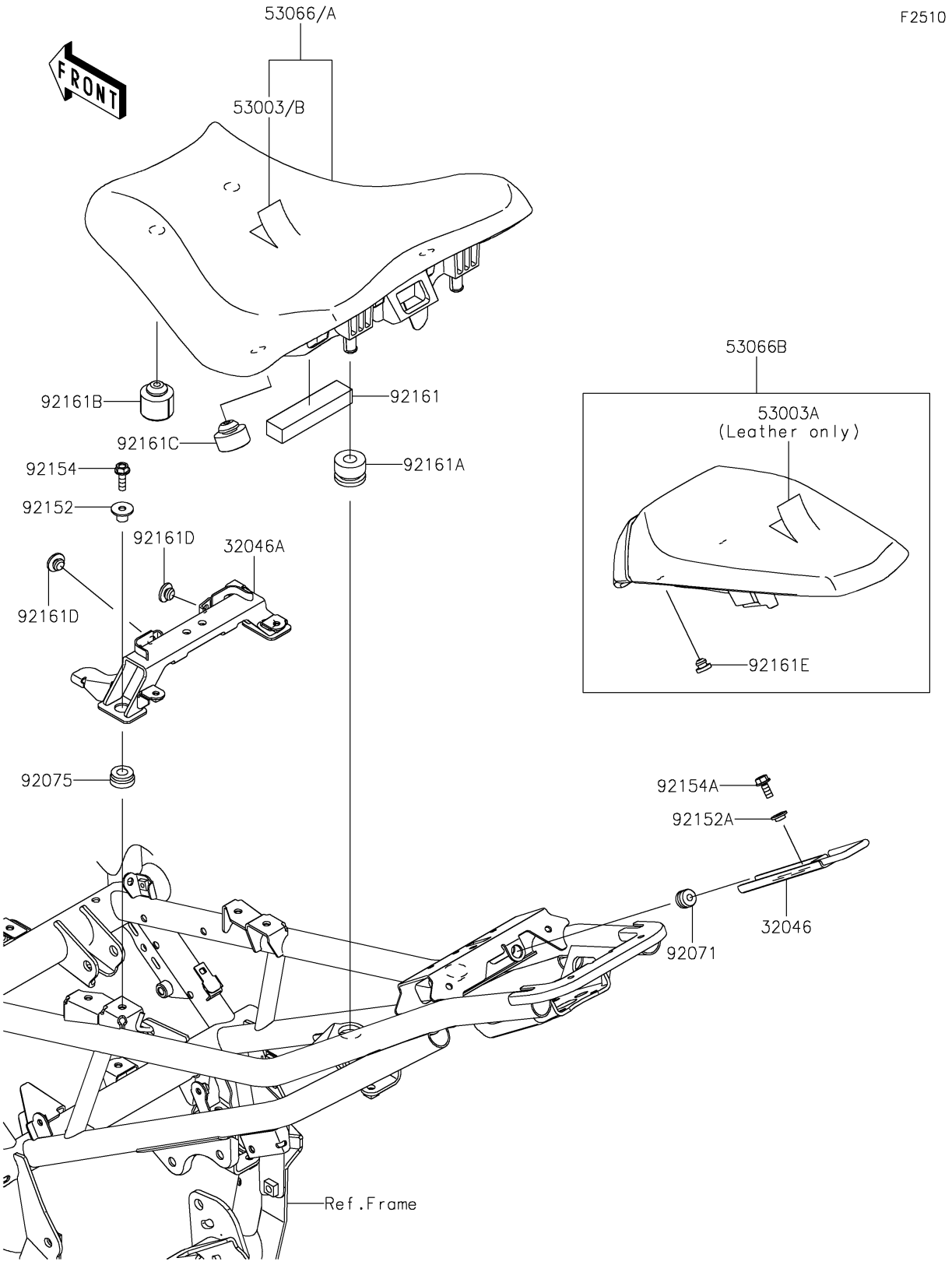

© 2026 Kawasaki Motors Corp., U.S.A.

2022 Z900 SE

PARTS LIST

Seat

ITEM NAME	PART NUMBER	QUANTITY
BRACKET-SEAT,FR LOCK (Ref # 32046)	32046-0401	1
BRACKET-SEAT,FR (Ref # 32046A)	32046-0450	1
LEATHER,RR SEAT,BLACK (Ref # 53003A)	53003-0433-MA	1
SEAT-ASSY,RR,BLACK+BLK (Ref # 53066B)	53066-0668-12Y	1
GROMMET (Ref # 92071)	92071-0038	1
DAMPER (Ref # 92075)	92075-277	2
COLLAR (Ref # 92152)	92152-2616	2
COLLAR,L=4.6 (Ref # 92152A)	92152-2694	1
BOLT,FLANGED,6X20 (Ref # 92154)	92154-0776	2
BOLT-FLANGED,6X14 (Ref # 92154A)	92154-4292	1
DAMPER,20X90X15 (Ref # 92161)	92161-1867	1
DAMPER,12X28X21 (Ref # 92161A)	92161-1913	2
DAMPER,14X30X22 (Ref # 92161B)	92161-1969	2
DAMPER,14X30X14.5 (Ref # 92161C)	92161-1970	2
DAMPER (Ref # 92161D)	92161-2250	2
DAMPER (Ref # 92161E)	92161-2308	2

© 2026 Kawasaki Motors Corp., U.S.A.