# 2022 Z900 SE

## PARTS DIAGRAM

### Generator

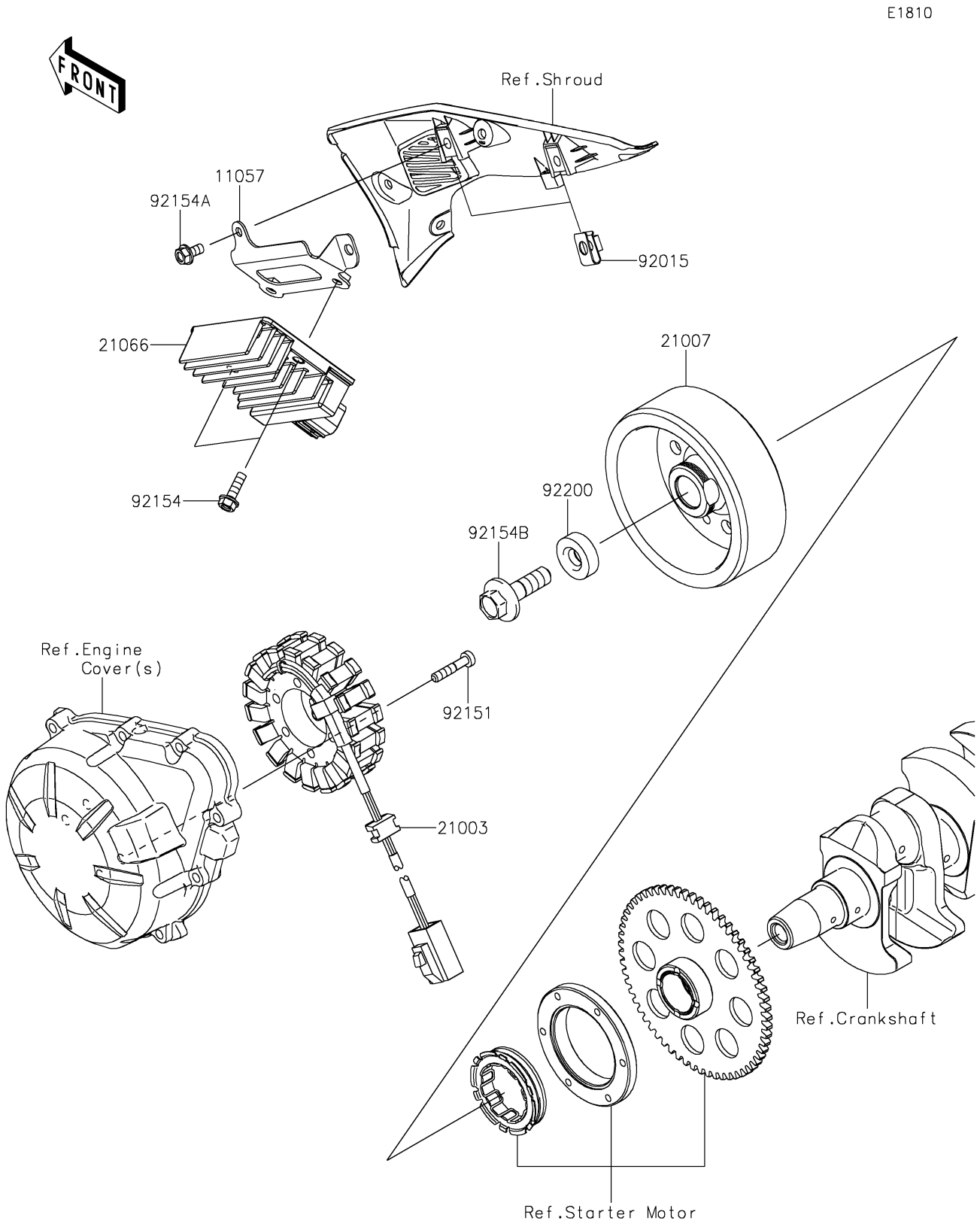


© 2026 Kawasaki Motors Corp., U.S.A.

# 2022 Z900 SE

## PARTS LIST

### Generator

| ITEM NAME | PART NUMBER | QUANTITY |
|---|---|---|
| BRACKET,REGULATOR (Ref # 11057) | 11057-2692 | 1 |
| STATOR (Ref # 21003) | 21003-0203 | 1 |
| ROTOR (Ref # 21007) | 21007-0691 | 1 |
| REGULATOR-VOLTAGE (Ref # 21066) | 21066-0753 | 1 |
| NUT,6MM (Ref # 92015) | 92015-1671 | 2 |
| BOLT,6X30 (Ref # 92151) | 92151-1626 | 4 |
| BOLT,FLANGED,6X20 (Ref # 92154) | 92154-0776 | 2 |
| BOLT,FLANGED,6X12 (Ref # 92154A) | 92154-1050 | 2 |
| BOLT,FLANGED,12X40 (Ref # 92154B) | 92154-2650 | 1 |
| WASHER,12X34X9 (Ref # 92200) | 92200-0369 | 1 |

© 2026 Kawasaki Motors Corp., U.S.A.