2022 Z900 SE

PARTS DIAGRAM

Air Cleaner

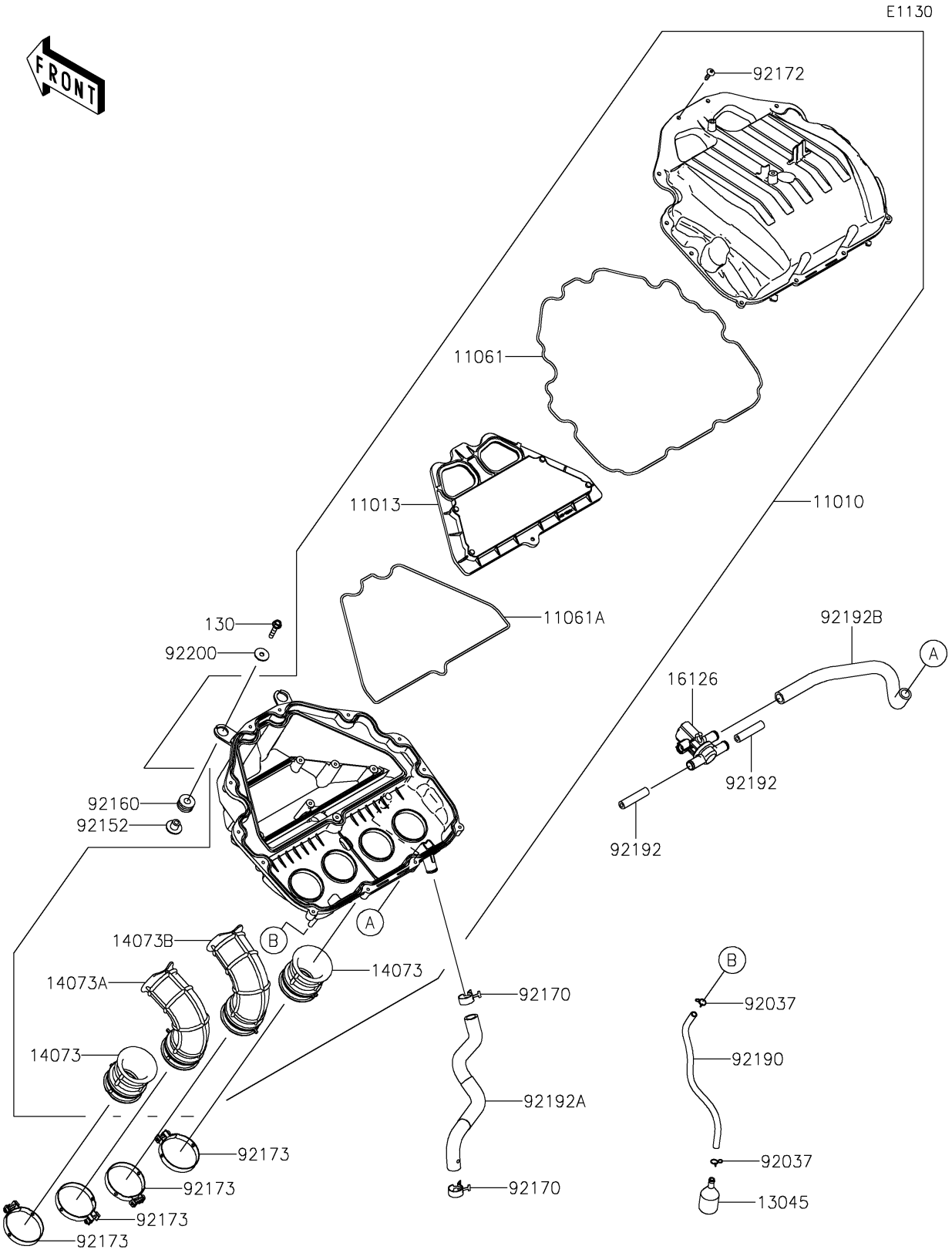

© 2026 Kawasaki Motors Corp., U.S.A.

2022 Z900 SE

PARTS LIST

Air Cleaner

ITEM NAME	PART NUMBER	QUANTITY
FILTER-ASSY-AIR (Ref # 11010)	11010-0949	1
ELEMENT-AIR FILTER (Ref # 11013)	11013-0760	1
GASKET,CASE (Ref # 11061)	11061-1215	1
GASKET,ELEMENT (Ref # 11061A)	11061-1216	1
RECEIVER-OIL (Ref # 13045)	13045-1057	1
DUCT,#1,#4 (Ref # 14073)	14073-0943	2
DUCT,#2 (Ref # 14073A)	14073-0944	1
DUCT,#3 (Ref # 14073B)	14073-0945	1
VALVE,AIR SWITCHING (Ref # 16126)	16126-0745	1
CLAMP (Ref # 92037)	92037-1712	2
COLLAR,6.5X10.5X13.1 (Ref # 92152)	92152-0547	2
DAMPER (Ref # 92160)	92160-1162	2
CLAMP (Ref # 92170)	92170-1060	2
SCREW,TAPPING,5X20 (Ref # 92172)	92172-0483	13
CLAMP,58MM (Ref # 92173)	92173-2484	4
TUBE,6X9X300 (Ref # 92190)	92190-1253	1
TUBE,HEAD-ASWV (Ref # 92192)	92192-0843	2
TUBE,BLOWBY (Ref # 92192A)	92192-1692	1
TUBE,ASV-A/C (Ref # 92192B)	92192-1693	1
WASHER,6.5X22X1.6 (Ref # 92200)	92200-1087	2
BOLT-FLANGED,6X30 (Ref # 130)	130BB0630	2

© 2026 Kawasaki Motors Corp., U.S.A.