2022 Z900 SE

PARTS DIAGRAM

Cylinder Head Cover

E1112

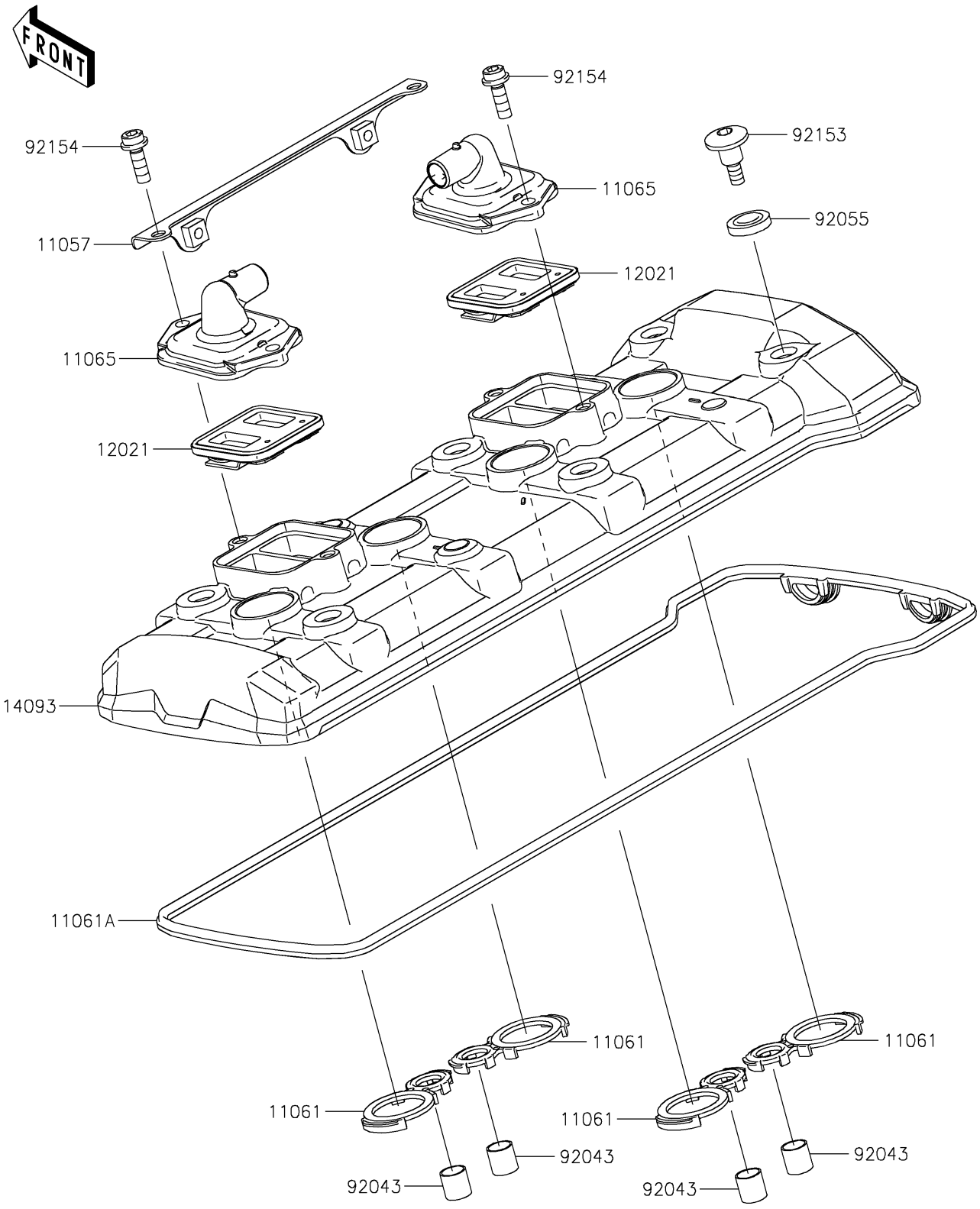

© 2026 Kawasaki Motors Corp., U.S.A.

2022 Z900 SE

PARTS LIST

Cylinder Head Cover

ITEM NAME	PART NUMBER	QUANTITY
BRACKET,HEAT COVER (Ref # 11057)	11057-0299	1
GASKET,SPARK PLUG (Ref # 11061)	11061-1213	4
GASKET,HEAD (Ref # 11061A)	11061-1214	1
CAP,HEAD COVER (Ref # 11065)	11065-0328	2
VALVE-ASSY-REED (Ref # 12021)	12021-0016	2
COVER,HEAD (Ref # 14093)	14093-0521	1
PIN,10.1X12X14 (Ref # 92043)	92043-4009	4
RING-O (Ref # 92055)	92055-0785	6
BOLT,SOCKET,6X22.5 (Ref # 92153)	92153-1779	6
BOLT,SOCKET,6X18 (Ref # 92154)	92154-0351	4

© 2026 Kawasaki Motors Corp., U.S.A.