1996 Vulcan 1500

PARTS DIAGRAM

Rear Brake

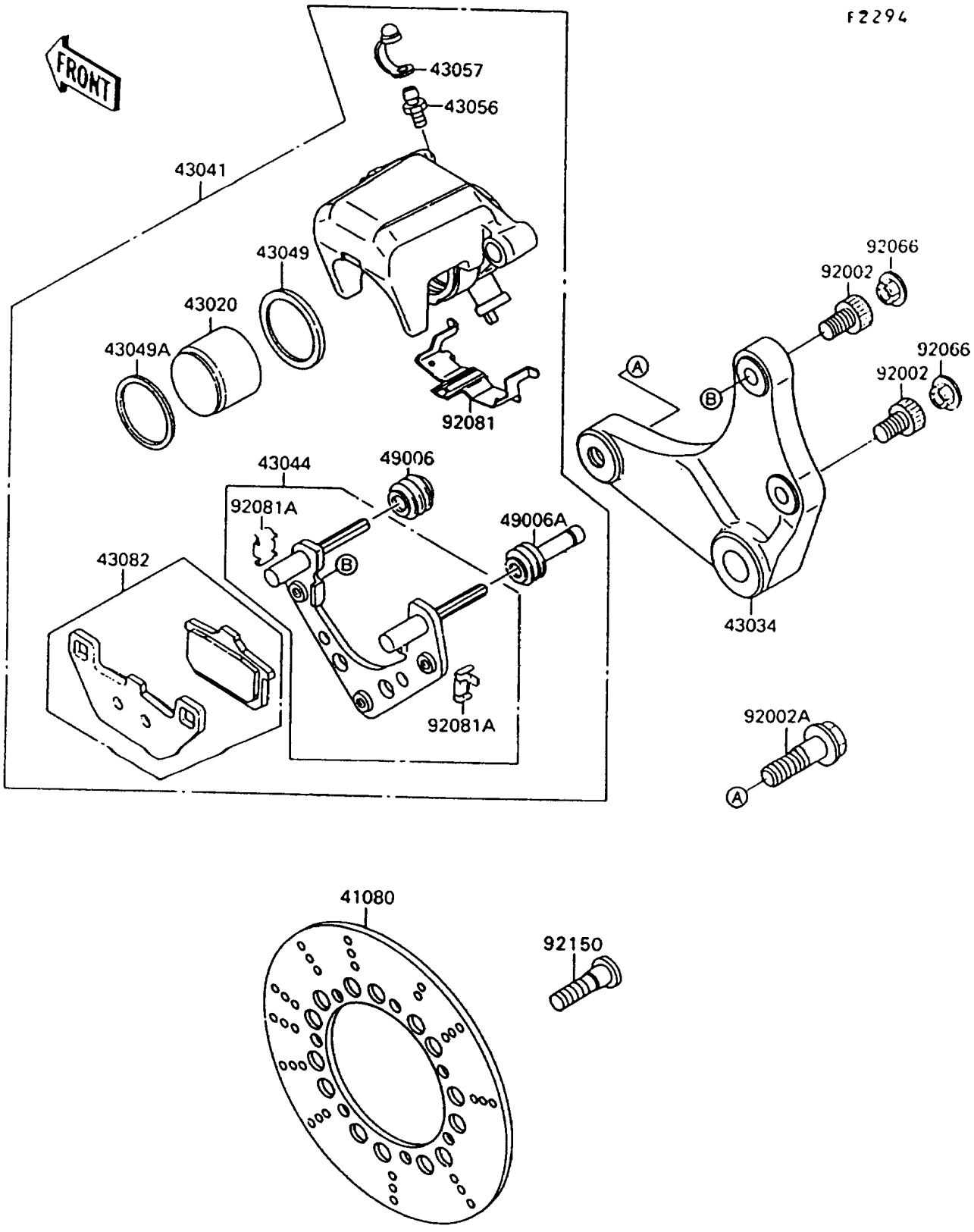

© 2026 Kawasaki Motors Corp., U.S.A.

1996 Vulcan 1500

PARTS LIST

Rear Brake

ITEM NAME	PART NUMBER	QUANTITY
DISC,RR,SILVER (Ref # 41080)	41080-1128	1
PISTON-COMP-BRAKE (Ref # 43020)	43020-1066	1
HOLDER-BRAKE,REAR CALIPER (Ref # 43034)	43034-1080	1
CALIPER-ASSY,RR,SILVER NO.1 (Ref # 43041)	43041-1588-GN	1
HOLDER-COMP-CALIPER,RR (Ref # 43044)	43044-1103	1
RING,PISTON SEAL (Ref # 43049)	43049-002	1
PACKING,PISTON (Ref # 43049A)	43049-1028	1
BREATHER-BRAKE (Ref # 43056)	43056-1054	1
CAP-BREATHER (Ref # 43057)	43057-003	1
PAD-ASSY-BRAKE (Ref # 43082)	43082-1062	1
BOOT,CALIPER (Ref # 49006)	49006-1094	1
BOOT,CALIPER (Ref # 49006A)	49006-1095	1
BOLT,SOCKET,10X17 (Ref # 92002)	92002-1713	2
BOLT,FLANGED,12X40 (Ref # 92002A)	92002-1969	1
PLUG (Ref # 92066)	92066-1285	2
SPRING,PAD (Ref # 92081)	92081-1525	1
SPRING,PAD STOPPER (Ref # 92081A)	92081-1661	2
BOLT,SOCKET,8X30 (Ref # 92150)	92150-1771	7

© 2026 Kawasaki Motors Corp., U.S.A.