1996 Vulcan 1500

PARTS DIAGRAM

Rear Wheel/Chain

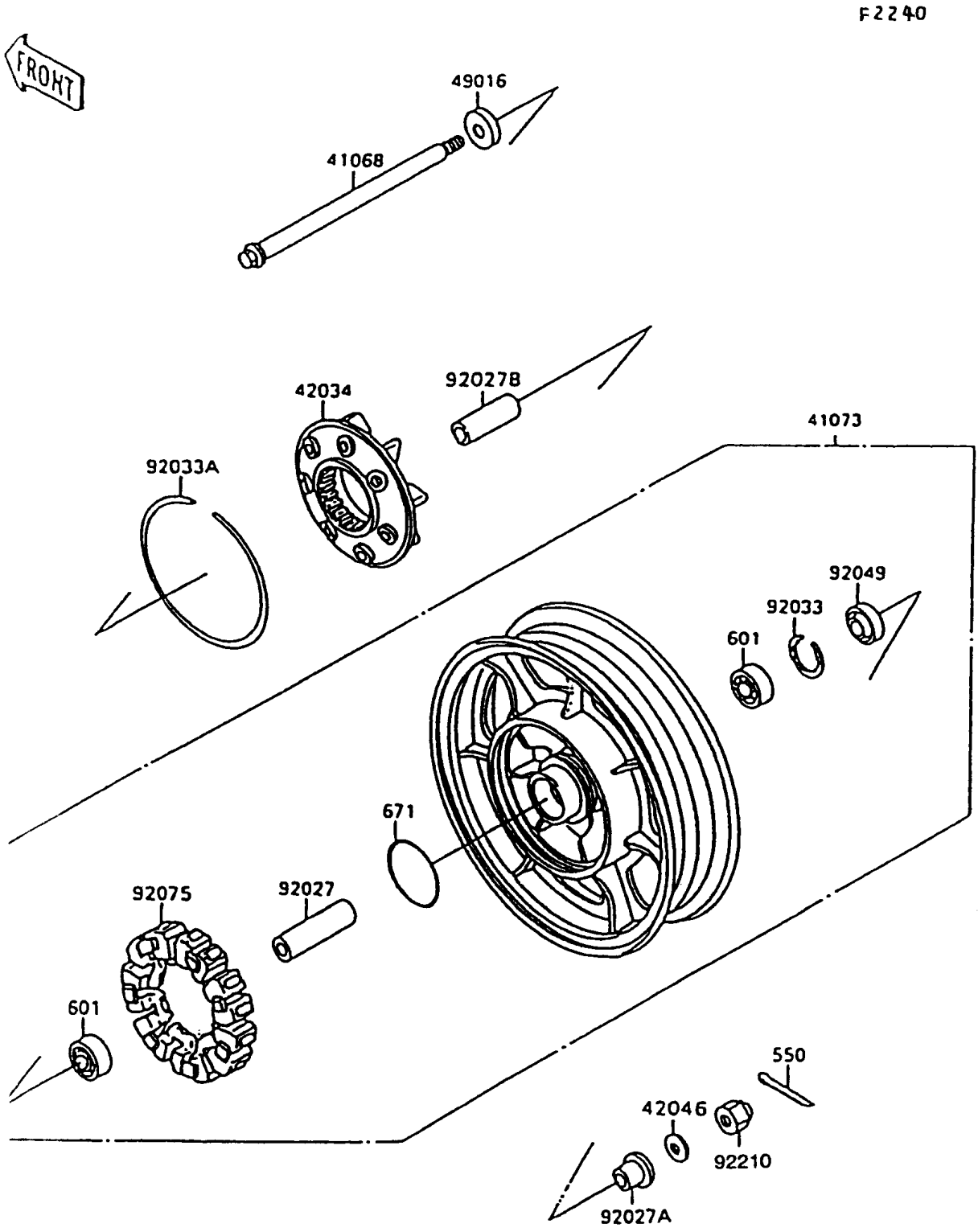

© 2026 Kawasaki Motors Corp., U.S.A.

1996 Vulcan 1500

PARTS LIST

Rear Wheel/Chain

ITEM NAME	PART NUMBER	QUANTITY
PIN-COTTER,4.0X35 (Ref # 550)	550D4035	1
BEARING-BALL,#6304UUC3 (Ref # 601)	601B6304UU	2
O RING,80MM (Ref # 671)	671B2580	1
AXLE,RR (Ref # 41068)	41068-1410	1
WHEEL-ASSY,RR,BLACK (Ref # 41073)	41073-1588-18	1
COUPLING,RR HUB (Ref # 42034)	42034-1011	1
WASHER,21X33X2.6 (Ref # 42046)	42046-003	1
COVER-SEAL (Ref # 49016)	49016-1019	1
COLLAR,20.2X28X105.5 (Ref # 92027)	92027-1901	1
COLLAR,RR AXLE,L=21.5 (Ref # 92027A)	92027-1902	1
COLLAR,20.2X28X86 (Ref # 92027B)	92027-1969	1
RING-SNAP,52MM (Ref # 92033)	92033-1043	1
RING-SNAP,220MM (Ref # 92033A)	92033-1230	1
SEAL-OIL,28X52X5 (Ref # 92049)	92049-1061	1
DAMPER,SHOCK,RR HUB (Ref # 92075)	92075-1121	1
NUT,CASTLE,18MM (Ref # 92210)	92210-1134	1

© 2026 Kawasaki Motors Corp., U.S.A.