1996 Vulcan 1500

PARTS DIAGRAM

Radiator

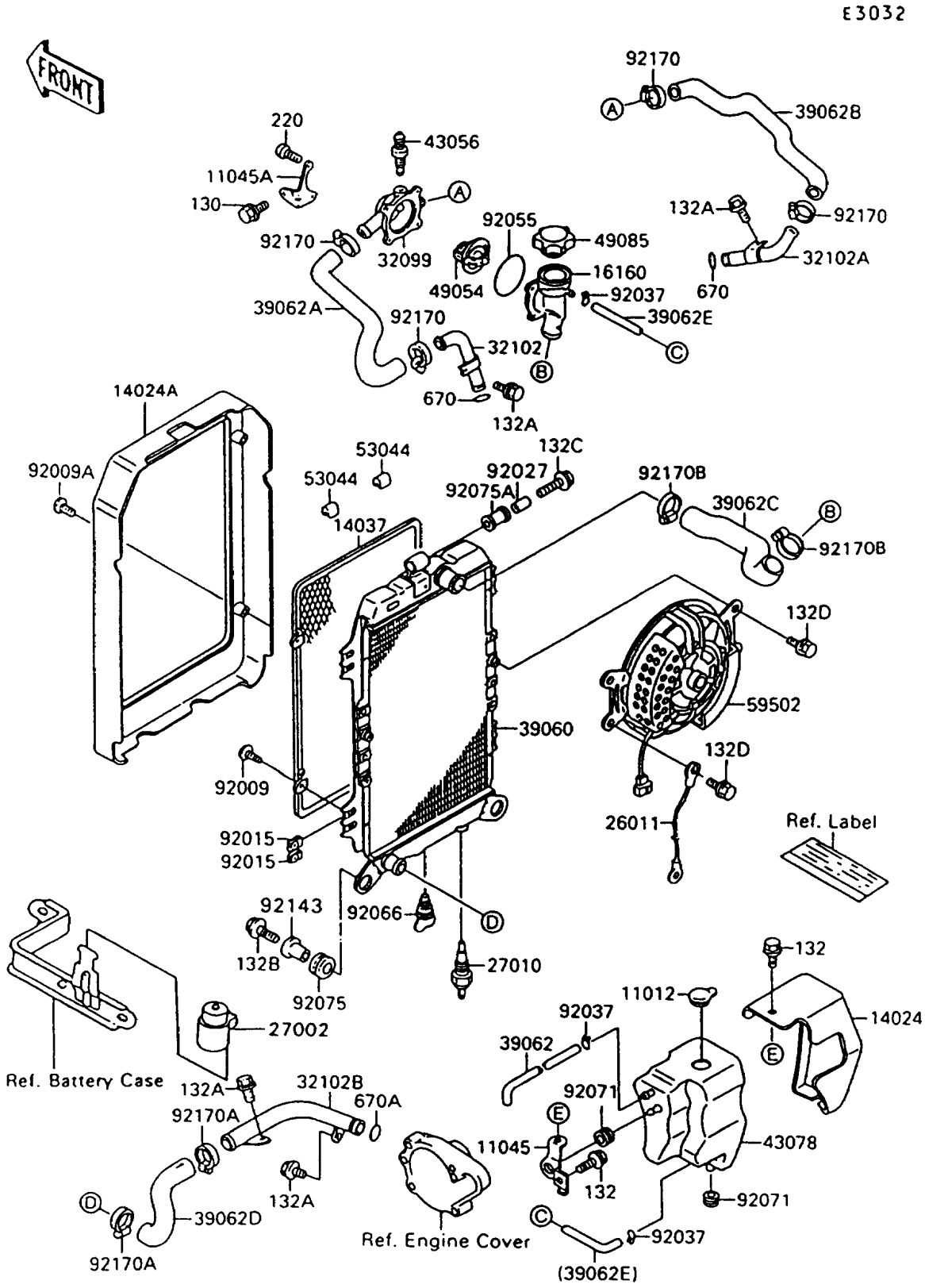

© 2026 Kawasaki Motors Corp., U.S.A.

1996 Vulcan 1500

PARTS LIST

Radiator

ITEM NAME	PART NUMBER	QUANTITY
CAP (Ref # 11012)	11012-1585	1
BRACKET,RESERVOIR (Ref # 11045)	11045-1436	1
BRACKET,THERMOSTAT (Ref # 11045A)	11045-1437	1
COVER,RESERVOIR (Ref # 14024)	14024-1406	1
COVER,RADIATOR,EBONY (Ref # 14024A)	14024-1429-H8	1
SCREEN (Ref # 14037)	14037-1090	1
BODY,THERMOSTAT,UPP (Ref # 16160)	16160-1116	1
WIRE-LEAD (Ref # 26011)	26011-1412	1
RELAY-ASSY (Ref # 27002)	27002-1051	1
SWITCH,FAN (Ref # 27010)	27010-1167	1
CASE,THERMOSTAT (Ref # 32099)	32099-1093	1
PIPE,HEAD,FR (Ref # 32102)	32102-1413	1
PIPE,HEAD,RR (Ref # 32102A)	32102-1414	1
PIPE,PUMP COVER-HOSE (Ref # 32102B)	32102-1415	1
RADIATOR (Ref # 39060)	39060-1077	1
HOSE-COOLING (Ref # 39062)	39062-1125	1
HOSE-COOLING,HEAD,FR (Ref # 39062A)	39062-1227	1
HOSE-COOLING,HEAD,RR (Ref # 39062B)	39062-1228	1
HOSE-COOLING,THERMO-RADIATOR (Ref # 39062C)	39062-1229	1
HOSE-COOLING,RADIATOR-PUMP (Ref # 39062D)	39062-1252	1
HOSE-COOLING (Ref # 39062E)	39062-1255	1
BREATHER (Ref # 43056)	43056-003	1
RESERVOIR (Ref # 43078)	43078-1085	1
THERMOSTAT (Ref # 49054)	49054-1051	1
CAP-ASSY-PRESSURE (Ref # 49085)	49085-1067	1
TRIM (Ref # 53044)	53044-1199	4
FAN-ASSY (Ref # 59502)	59502-1071	1
SCREW,TAPPING,6X16 (Ref # 92009)	92009-1436	4
SCREW,TAPPING,6X30 (Ref # 92009A)	92009-1481	4

© 2026 Kawasaki Motors Corp., U.S.A.

1996 Vulcan 1500

PARTS LIST

Radiator

ITEM NAME	PART NUMBER	QUANTITY
NUT,6MM (Ref # 92015)	92015-1758	8
COLLAR (Ref # 92027)	92027-209	1
CLAMP,TUBE (Ref # 92037)	92037-147	3
RING-O,53.5X2.6 (Ref # 92055)	92055-112	1
PLUG,DRAIN (Ref # 92066)	92066-1293	1
GROMMET (Ref # 92071)	92071-1115	2
DAMPER (Ref # 92075)	92075-1665	2
DAMPER (Ref # 92075A)	92075-1920	1
COLLAR (Ref # 92143)	92143-1063	2
CLAMP,COOLING HOSE (Ref # 92170)	92170-1032	4
CLAMP,COOLING HOSE (Ref # 92170A)	92170-1034	2
BOLT-FLANGED,6X12 (Ref # 130)	130B0612	2
BOLT-FLANGED-SMALL (Ref # 132)	132E0610	2
BOLT-FLANGED-SMALL (Ref # 132A)	132E0612	4
BOLT-FLANGED-SMALL (Ref # 132B)	132E0625	2
BOLT-FLANGED-SMALL (Ref # 132C)	132E0640	1
BOLT-FLANGED-SMALL,6X10 (Ref # 132D)	132J0610	4
SCREW-PAN-CROS,5X14 (Ref # 220)	220D0514	4
O RING,14MM (Ref # 670)	670B2014	2
O RING,18MM (Ref # 670A)	670B2018	1
CLAMP,COOLING HOSE (Ref # 92170B)	92170-1284	2

© 2026 Kawasaki Motors Corp., U.S.A.