2023 KX™450X

PARTS DIAGRAM

Chassis Electrical Equipment

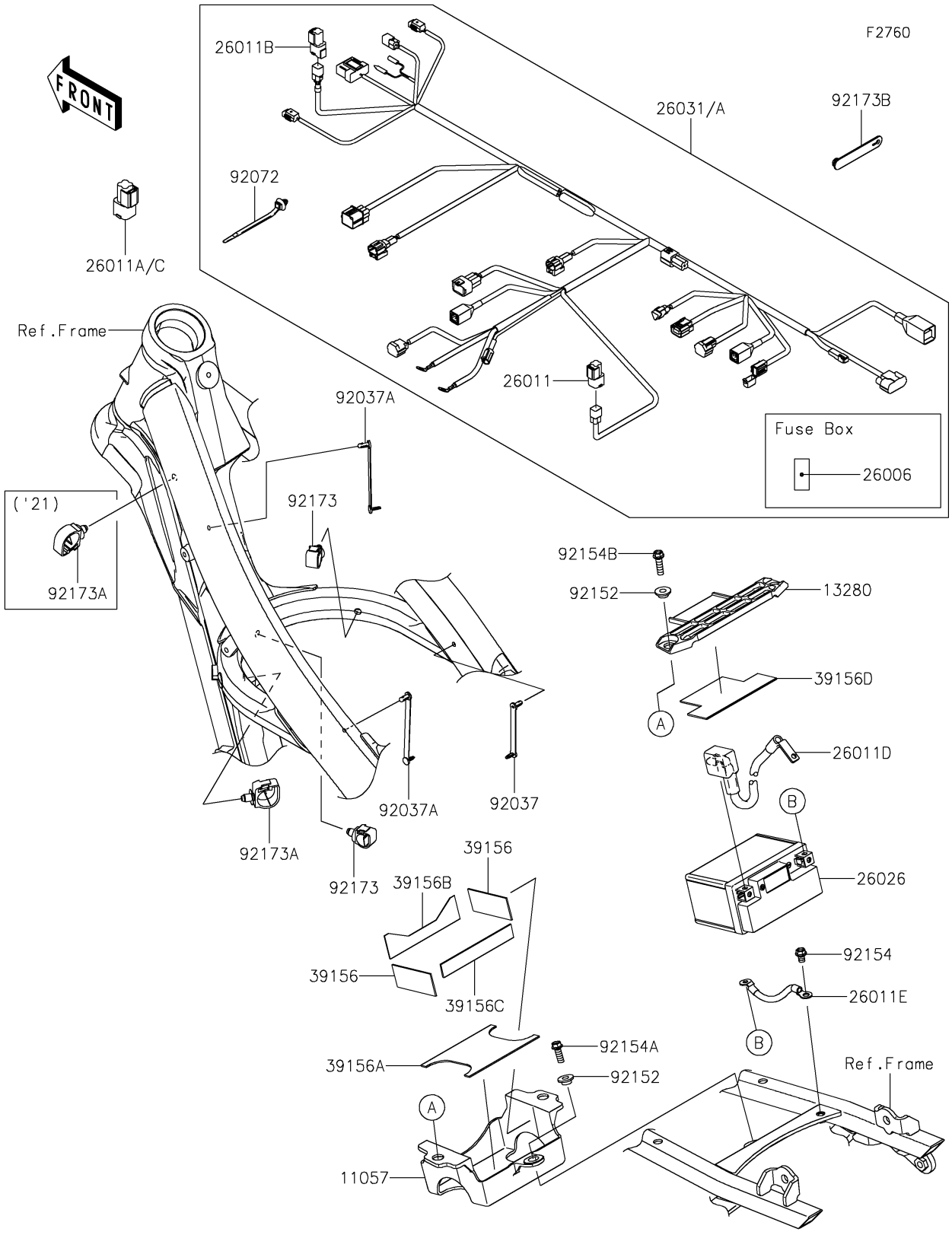

© 2026 Kawasaki Motors Corp., U.S.A.

2023 KX™450X

PARTS LIST

Chassis Electrical Equipment

Kawasaki
Let the Good Times Roll®

ITEM NAME	PART NUMBER	QUANTITY

© 2026 Kawasaki Motors Corp., U.S.A.