2023 KX™450X

PARTS DIAGRAM

Fenders

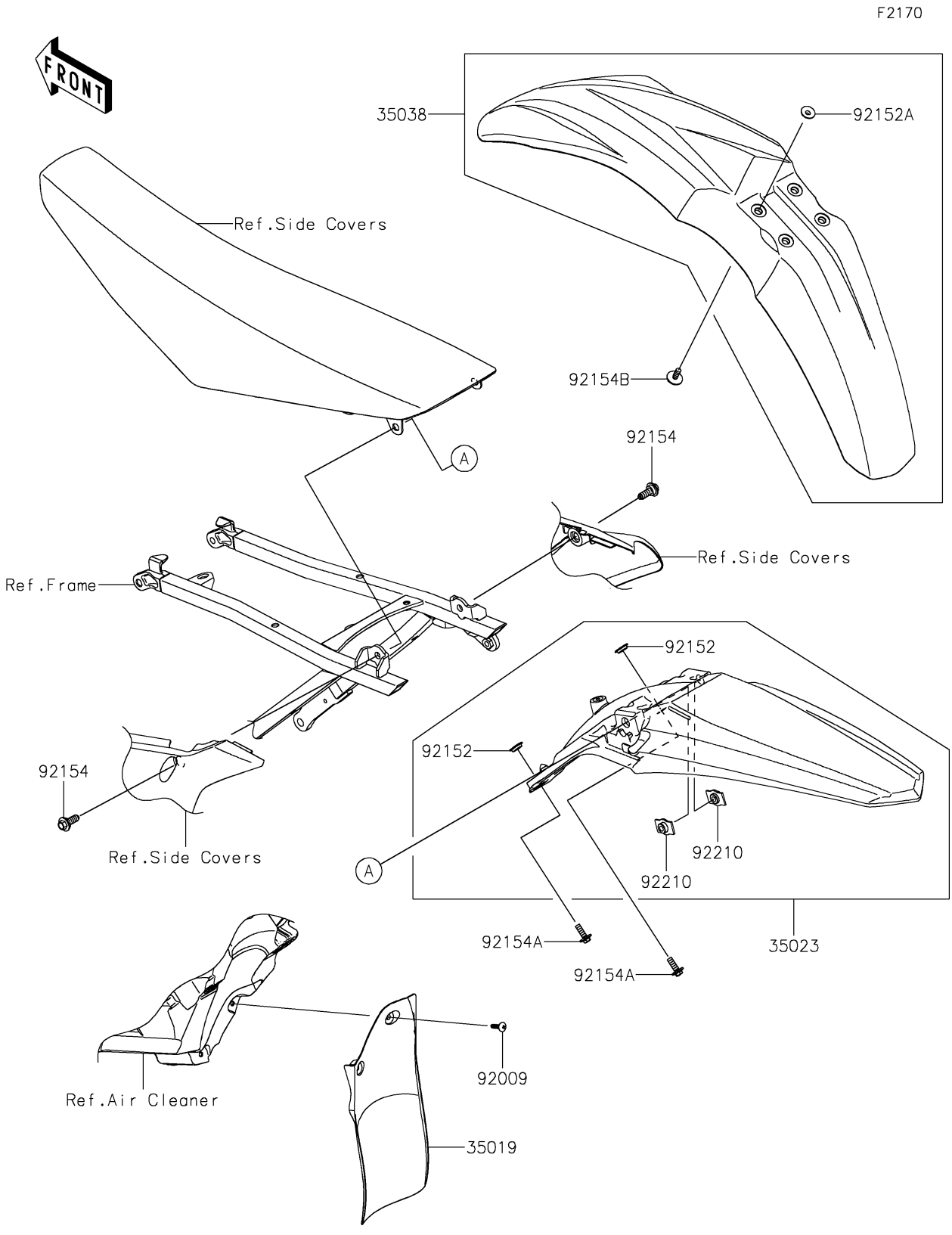

© 2026 Kawasaki Motors Corp., U.S.A.

2023 KX™450X

PARTS LIST

Fenders

ITEM NAME	PART NUMBER	QUANTITY
FLAP (Ref # 35019)	35019-0669	1
FENDER-REAR,L.GREEN (Ref # 35023)	35023-0445-290	1
FENDER-FRONT,L.GREEN (Ref # 35038)	35038-0008-290	1
SCREW,TAPPING,5X20 (Ref # 92009)	92009-1993	2
COLLAR (Ref # 92152)	92152-0052	2
COLLAR (Ref # 92152A)	92152-1422	4
BOLT,STEPPED,8X23 (Ref # 92154)	92154-2961	2
BOLT,FLANGED,6X20 (Ref # 92154A)	92154-2972	2
BOLT,6X18 (Ref # 92154B)	92154-2973	4
NUT,8MM (Ref # 92210)	92210-1635	2

© 2026 Kawasaki Motors Corp., U.S.A.