2023 KX™450X

PARTS DIAGRAM

Cylinder Head

E1111

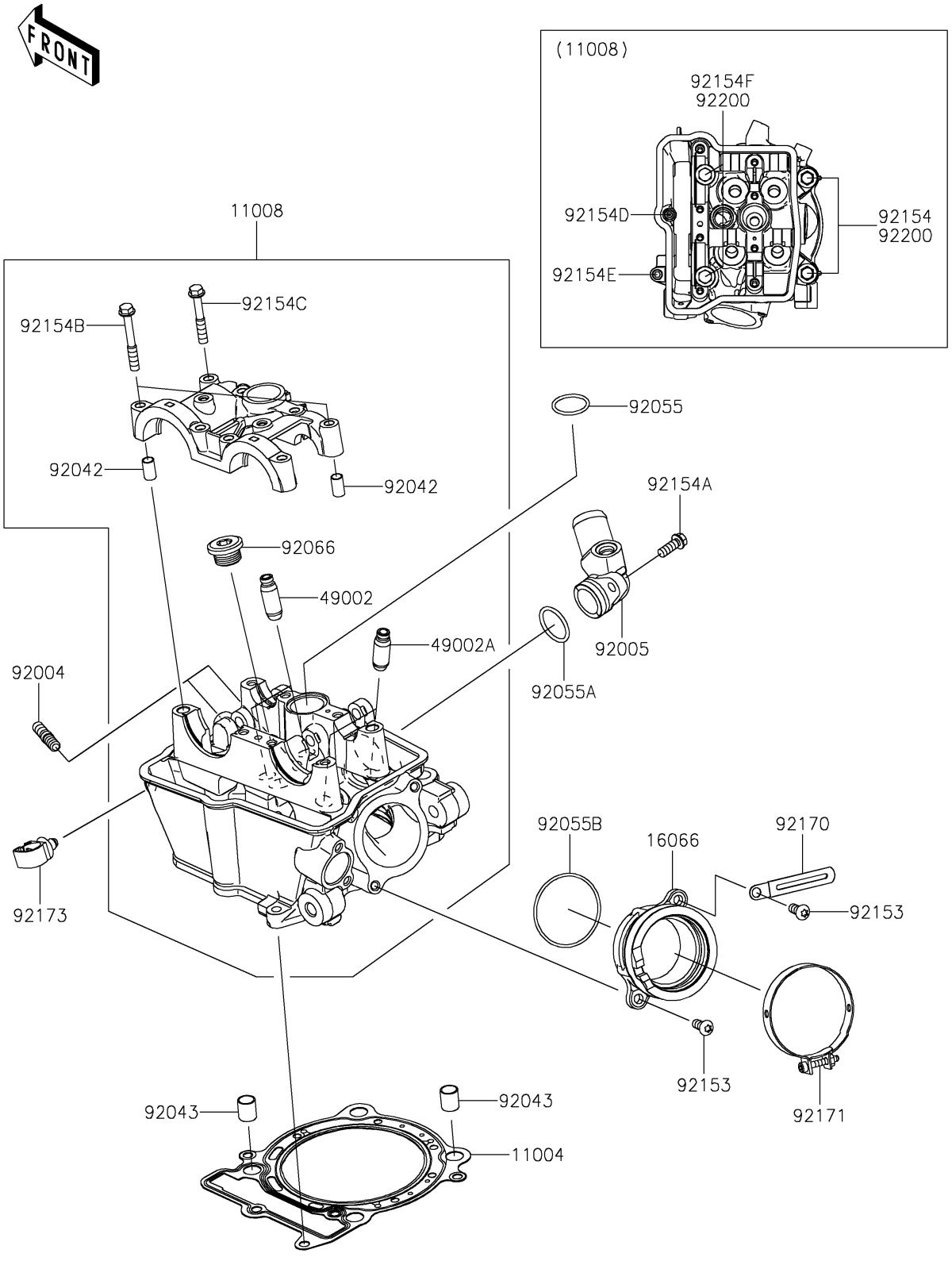

© 2026 Kawasaki Motors Corp., U.S.A.

2023 KX™450X

PARTS LIST

Cylinder Head

ITEM NAME	PART NUMBER	QUANTITY

© 2026 Kawasaki Motors Corp., U.S.A.