2021 KFX®50

PARTS DIAGRAM

Second Air

E1132

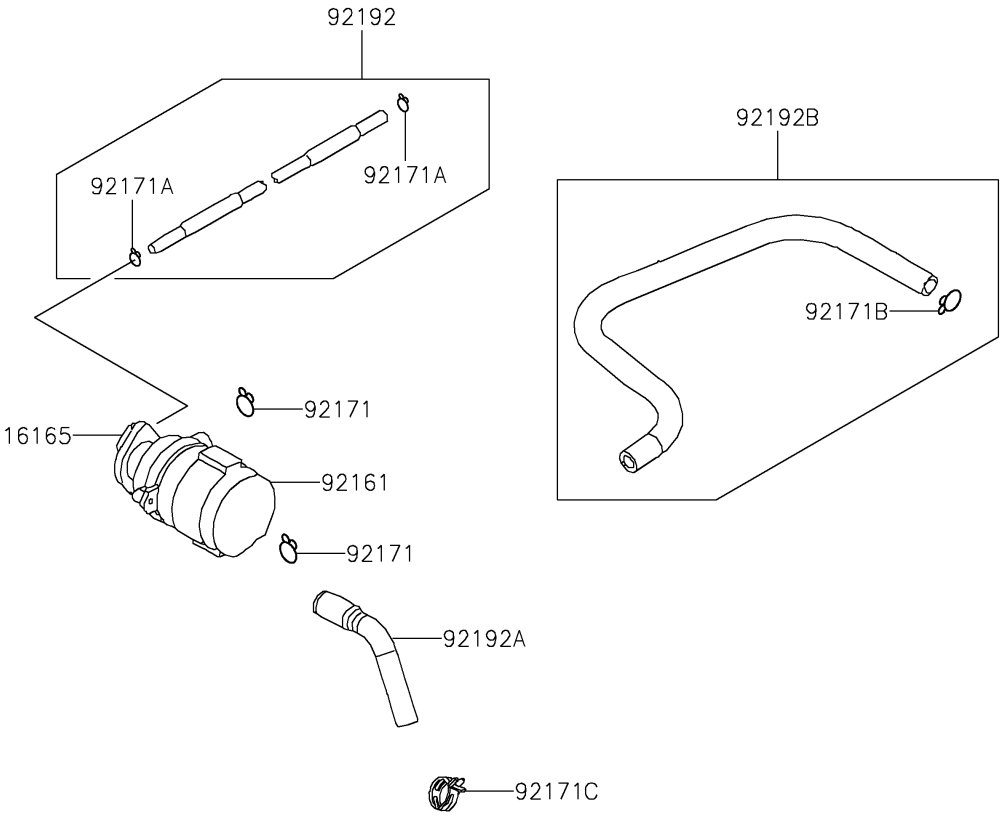

© 2026 Kawasaki Motors Corp., U.S.A.

2021 KFX®50

PARTS LIST

Second Air

ITEM NAME	PART NUMBER	QUANTITY
SEPARATOR (Ref # 16165)	16165-Y002	1
DAMPER (Ref # 92161)	92161-Y008	1
CLAMP (Ref # 92171)	92171-Y016	2
CLAMP (Ref # 92171A)	92171-Y017	2
CLAMP (Ref # 92171B)	92171-Y020	1
CLAMP (Ref # 92171C)	92171-Y022	1
TUBE,VACUUM (Ref # 92192)	92192-Y007	1
TUBE,AICV-REED VALVE (Ref # 92192A)	92192-Y009	1
TUBE,AIR-AICV (Ref # 92192B)	92192-Y010	1

© 2026 Kawasaki Motors Corp., U.S.A.