2016 MULE™ 610 4x4 SE Fleet

PARTS DIAGRAM

Ignition Switch

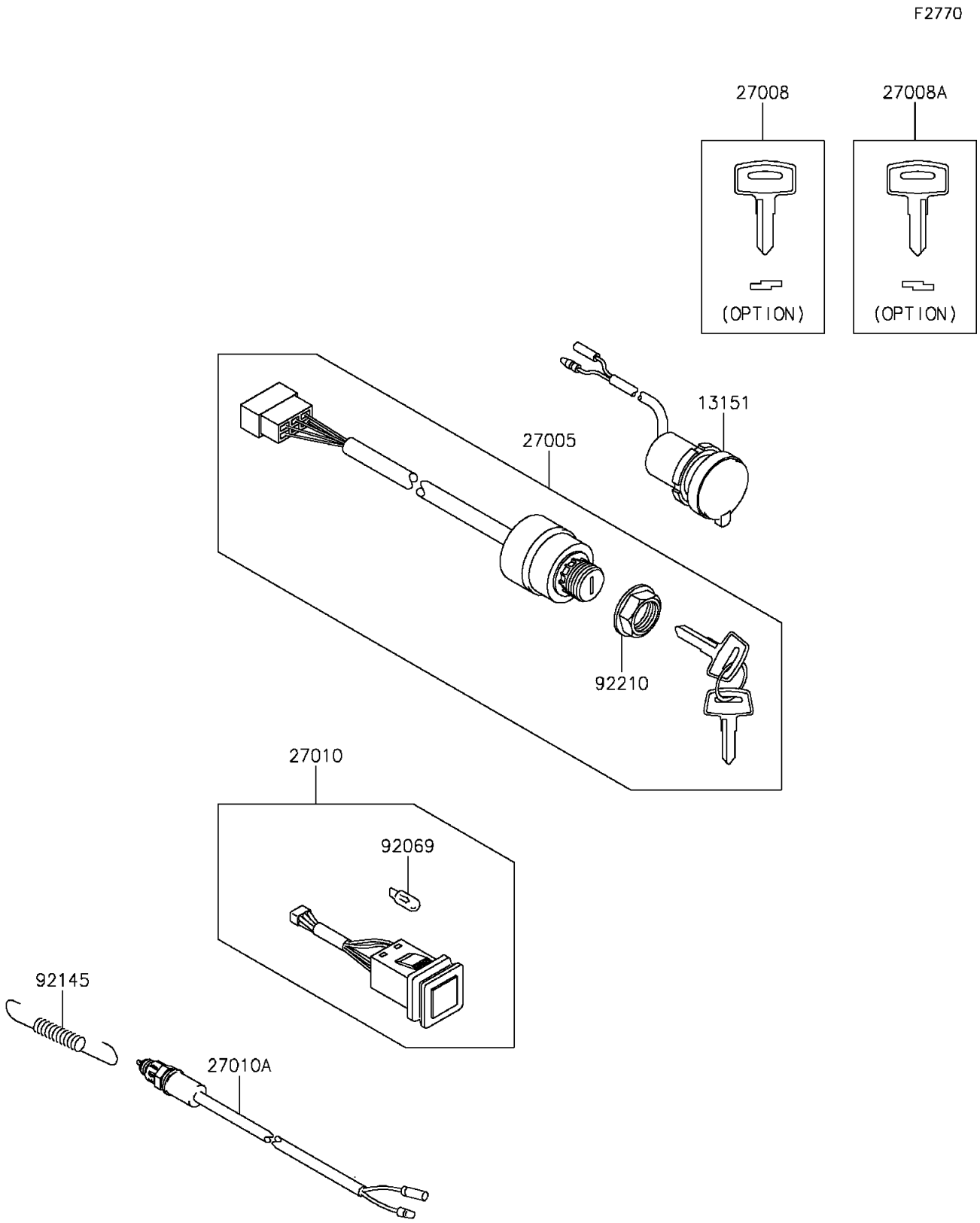

© 2026 Kawasaki Motors Corp., U.S.A.

2016 MULE™ 610 4x4 SE Fleet

PARTS LIST

Ignition Switch

ITEM NAME	PART NUMBER	QUANTITY

© 2026 Kawasaki Motors Corp., U.S.A.