2016 MULE™ 610 4x4 SE Fleet

PARTS DIAGRAM

Generator/Ignition Coil

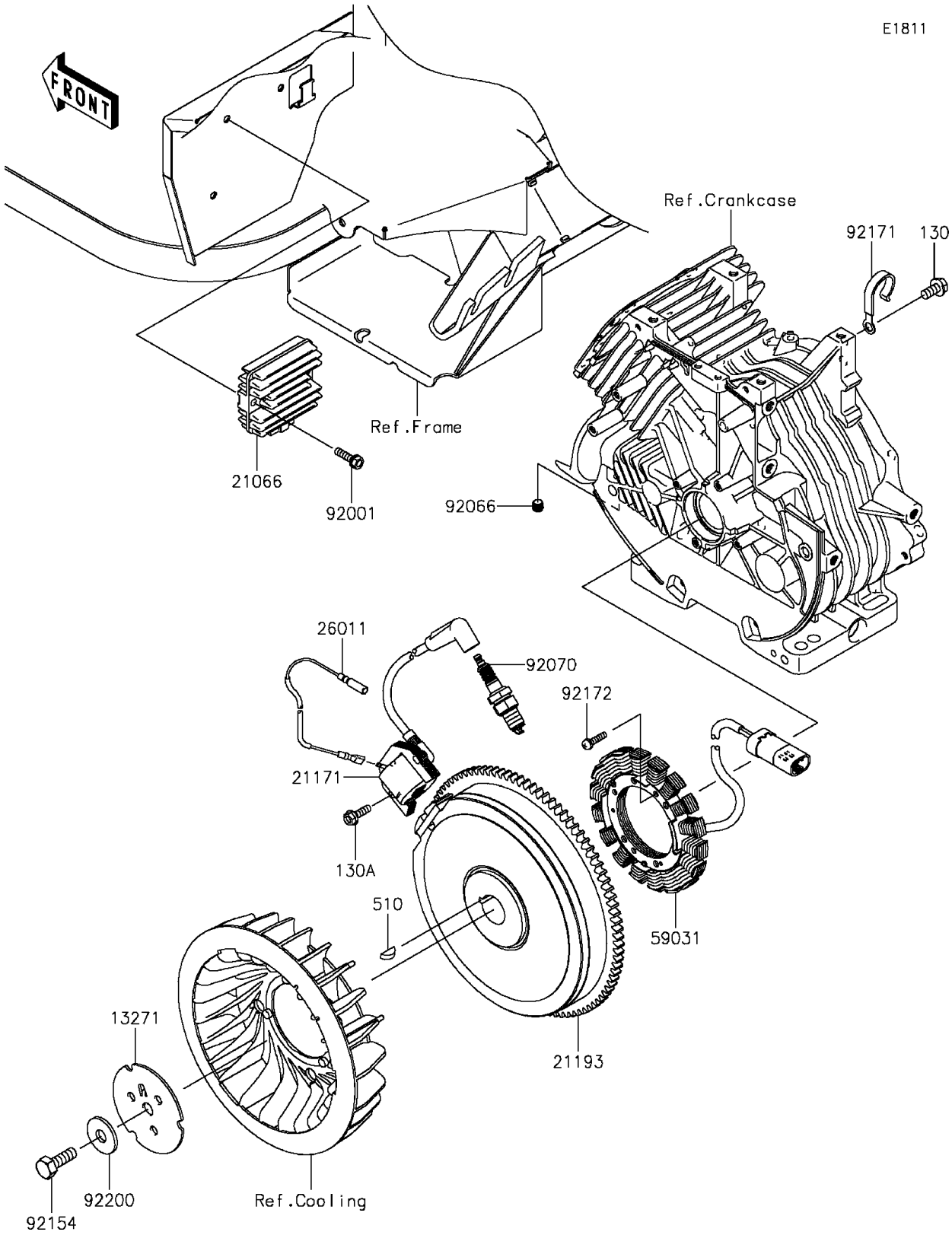

© 2026 Kawasaki Motors Corp., U.S.A.

2016 MULE™ 610 4x4 SE Fleet

PARTS LIST

Generator/Ignition Coil

ITEM NAME	PART NUMBER	QUANTITY
PLATE,FAN (Ref # 13271)	13271-7029	1
REGULATOR-VOLTAGE (Ref # 21066)	21066-0039	1
COIL-ASSY-IGNITION (Ref # 21171)	21171-7035	1
FLYWHEEL-ASSY (Ref # 21193)	21193-0025	1
WIRE-LEAD (Ref # 26011)	26011-7014	1
COIL-CHARGING (Ref # 59031)	59031-2132	1
BOLT,FLANGED,6X22 (Ref # 92001)	92001-1352	2
PLUG (Ref # 92066)	92066-0762	1
PLUG-SPARK,BPR5ES(NGK),SOLID (Ref # 92070)	92070-2088	1
BOLT,12X30 (Ref # 92154)	92154-7003	1
CLAMP (Ref # 92171)	92171-7005	1
SCREW,5X20 (Ref # 92172)	92172-7018	4
WASHER (Ref # 92200)	92200-7002	1
BOLT-FLANGED,8X16 (Ref # 130)	130AA0816	1
BOLT-FLANGED,6X20 (Ref # 130A)	130BA0620	2
KEY-WOODRUFF (Ref # 510)	510A5100	1

© 2026 Kawasaki Motors Corp., U.S.A.