2016 MULE™ 610 4x4 SE Fleet

PARTS DIAGRAM

Gear Change Mechanism

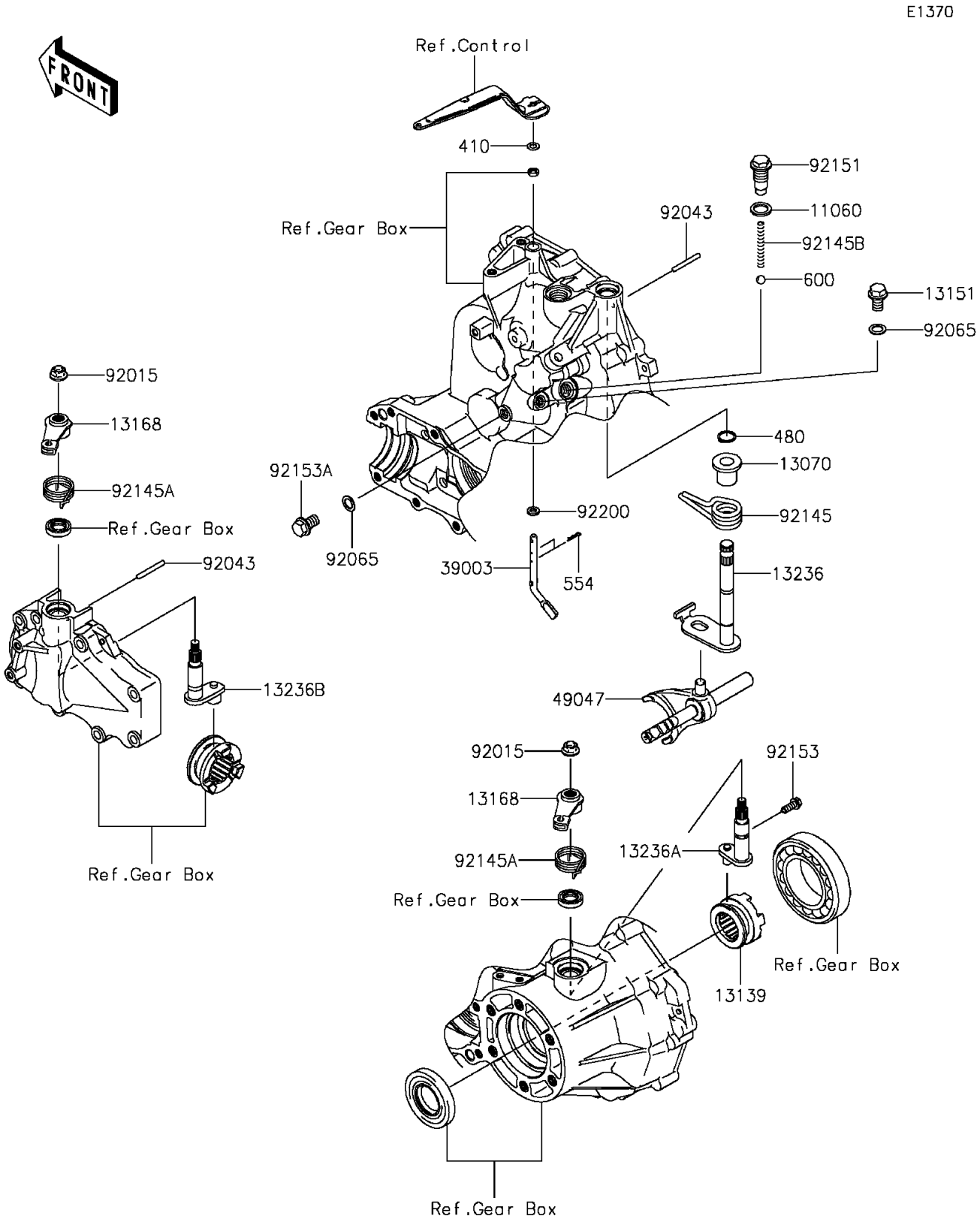

© 2026 Kawasaki Motors Corp., U.S.A.

2016 MULE™ 610 4x4 SE Fleet

PARTS LIST

Gear Change Mechanism

ITEM NAME	PART NUMBER	QUANTITY
GASKET,14X20X2 (Ref # 11060)	11060-1287	1
GUIDE (Ref # 13070)	13070-0030	1
SHIFTER,DIFF LOCK (Ref # 13139)	13139-0008	1
SWITCH-COMP,NEUTRAL (Ref # 13151)	13151-1080	1
LEVER,DIFF LOCK (Ref # 13168)	13168-1523	2
LEVER-COMP,FR/RR (Ref # 13236)	13236-0036	1
LEVER-COMP,DIFF LOCK (Ref # 13236A)	13236-0037	1
LEVER-COMP,2WD/4WD (Ref # 13236B)	13236-0168	1
ARM-PIVOT,GOVERNOR (Ref # 39003)	39003-1053	1
ROD-SHIFT,FR/RR (Ref # 49047)	49047-0013	1
NUT,FLANGED,8MM (Ref # 92015)	92015-1406	2
PIN,4X34.8 (Ref # 92043)	92043-1579	2
GASKET,10.5X16X1 (Ref # 92065)	92065-058	2
SPRING (Ref # 92145)	92145-0146	1
SPRING (Ref # 92145A)	92145-0226	2
SPRING,CHANGE POSITION (Ref # 92145B)	92145-1297	1
BOLT,CHANGE POSITION (Ref # 92151)	92151-1687	1
BOLT,6X16.6 (Ref # 92153)	92153-0591	1
BOLT,10X16 (Ref # 92153A)	92153-0621	1
WASHER,6.5X11.5X2.0 (Ref # 92200)	92200-2029	1
WASHER-PLAIN-SMALL (Ref # 410)	410AA0600	1
CIRCLIP-TYPE-C,13MM (Ref # 480)	480J1300	1
PIN-SNAP,1.2X21.2 (Ref # 554)	554DA0600	2
BALL-STEEL,5/16 (Ref # 600)	600A1000	1

© 2026 Kawasaki Motors Corp., U.S.A.