2016 MULE™ 610 4x4 XC CAMO

PARTS DIAGRAM

Front Box

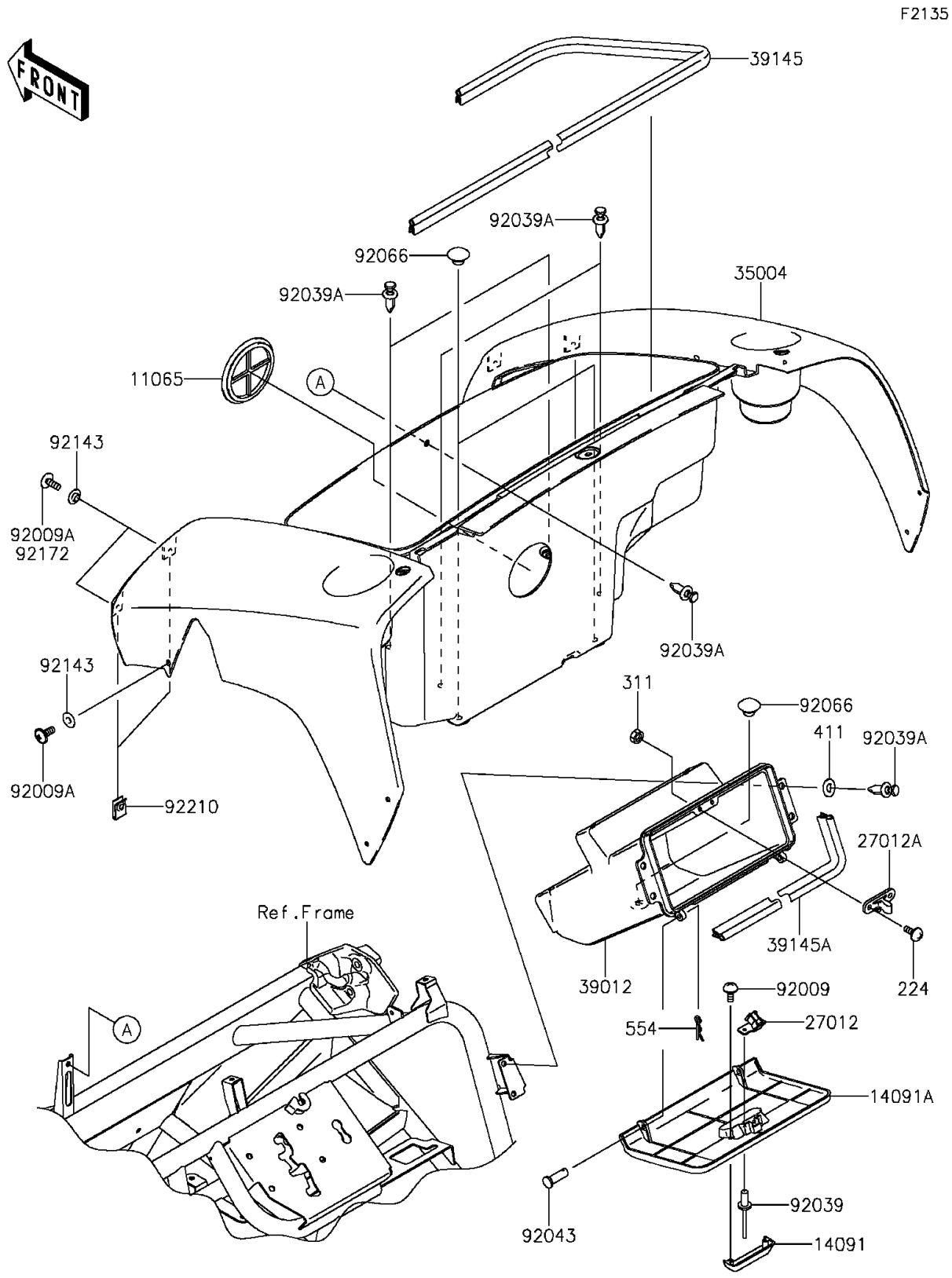

© 2026 Kawasaki Motors Corp., U.S.A.

2016 MULE™ 610 4x4 XC CAMO

PARTS LIST

Front Box

ITEM NAME	PART NUMBER	QUANTITY
CAP,F.BLACK (Ref # 11065)	11065-1053-6Z	1
COVER,STORAGE GRIP,F.BLACK (Ref # 14091)	14091-1659-6Z	1
COVER,CONTROL PANEL,F.BLACK (Ref # 14091A)	14091-1660-6Z	1
HOOK (Ref # 27012)	27012-1607	1
HOOK (Ref # 27012A)	27012-1612	1
FENDER-FRONT,STORAGE,CAMO (Ref # 35004)	35004-0049-42H	1
CASE-STORAGE,F.BLACK (Ref # 39012)	39012-1061-6Z	1
TRIM-SEAL,L=1940 (Ref # 39145)	39145-0007	1
TRIM-SEAL,L=774 (Ref # 39145A)	39145-1130	1
SCREW,TAPPING,4X12 (Ref # 92009)	92009-1444	2
SCREW,6X16 (Ref # 92009A)	92009-1621	2
RIVET (Ref # 92039)	92039-1041	2
RIVET (Ref # 92039A)	92039-1229	9
PIN,6X14.5 (Ref # 92043)	92043-125	2
PLUG (Ref # 92066)	92066-1485	3
COLLAR (Ref # 92143)	92143-1087	6
SCREW,TAPPING,6X20 (Ref # 92172)	92172-0488	4
NUT,LEAF SPRING,6MM (Ref # 92210)	92210-0624	4
SCREW-PAN-WP-CROS,4X12 (Ref # 224)	224AB0412	2
NUT-HEX,4MM (Ref # 311)	311AB0400	2
WASHER-PLAIN,8MM (Ref # 411)	411AA0800	4
PIN-SNAP,1.2X21.2 (Ref # 554)	554DA0600	2

© 2026 Kawasaki Motors Corp., U.S.A.