2016 MULE™ 610 4x4 XC CAMO

PARTS DIAGRAM

Frame

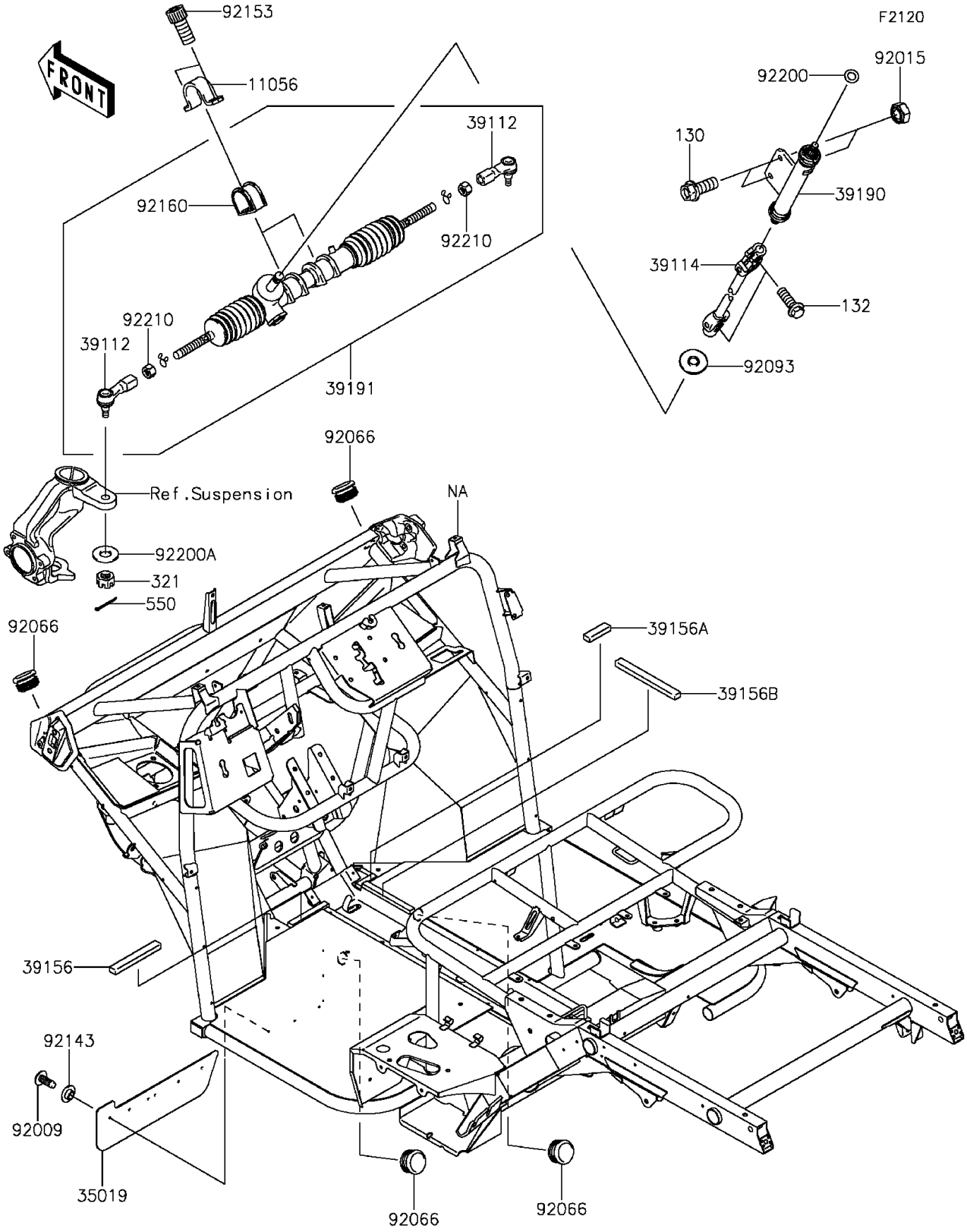

© 2026 Kawasaki Motors Corp., U.S.A.

2016 MULE™ 610 4x4 XC CAMO

PARTS LIST

Frame

ITEM NAME	PART NUMBER	QUANTITY
BRACKET,STEERING GEAR (Ref # 11056)	11056-2238	2
FLAP,FR (Ref # 35019)	35019-0589	2
RODEND-TIE,STEERING GEAR (Ref # 39112)	39112-0008	2
SHAFT-COMP-STRG (Ref # 39114)	39114-0003	1
PAD (Ref # 39156)	39156-0068	1
PAD (Ref # 39156A)	39156-0069	1
PAD (Ref # 39156B)	39156-0070	1
SHAFT-ASSY-STEERING (Ref # 39190)	39190-0004	1
GEAR-ASSY-STEERING (Ref # 39191)	39191-0023	1
SCREW,TAPPING,6X16 (Ref # 92009)	92009-1166	12
NUT,LOCK,10MM,BLACK (Ref # 92015)	92015-1189	2
PLUG (Ref # 92066)	92066-0036	4
SEAL (Ref # 92093)	92093-1313	1
COLLAR (Ref # 92143)	92143-1087	12
BOLT,SOCKET,10X23 (Ref # 92153)	92153-1269	4
DAMPER,STEERING GEAR (Ref # 92160)	92160-1084	2
WASHER,15X25X1.6 (Ref # 92200)	92200-0460	1
WASHER,10.3X23X1.6 (Ref # 92200A)	92200-2009	2
NUT,14MM (Ref # 92210)	92210-0217	2
BOLT-FLANGED,10X25 (Ref # 130)	130BB1025	2
BOLT-FLANGED-SMALL,8X25 (Ref # 132)	132BB0825	2
NUT-CASTLE (Ref # 321)	321BA1000	2
PIN-COTTER,2.0X22 (Ref # 550)	550AA2022	2

© 2026 Kawasaki Motors Corp., U.S.A.