2016 MULE™ 610 4x4 XC

PARTS DIAGRAM

Decals(DGF)

F2861A

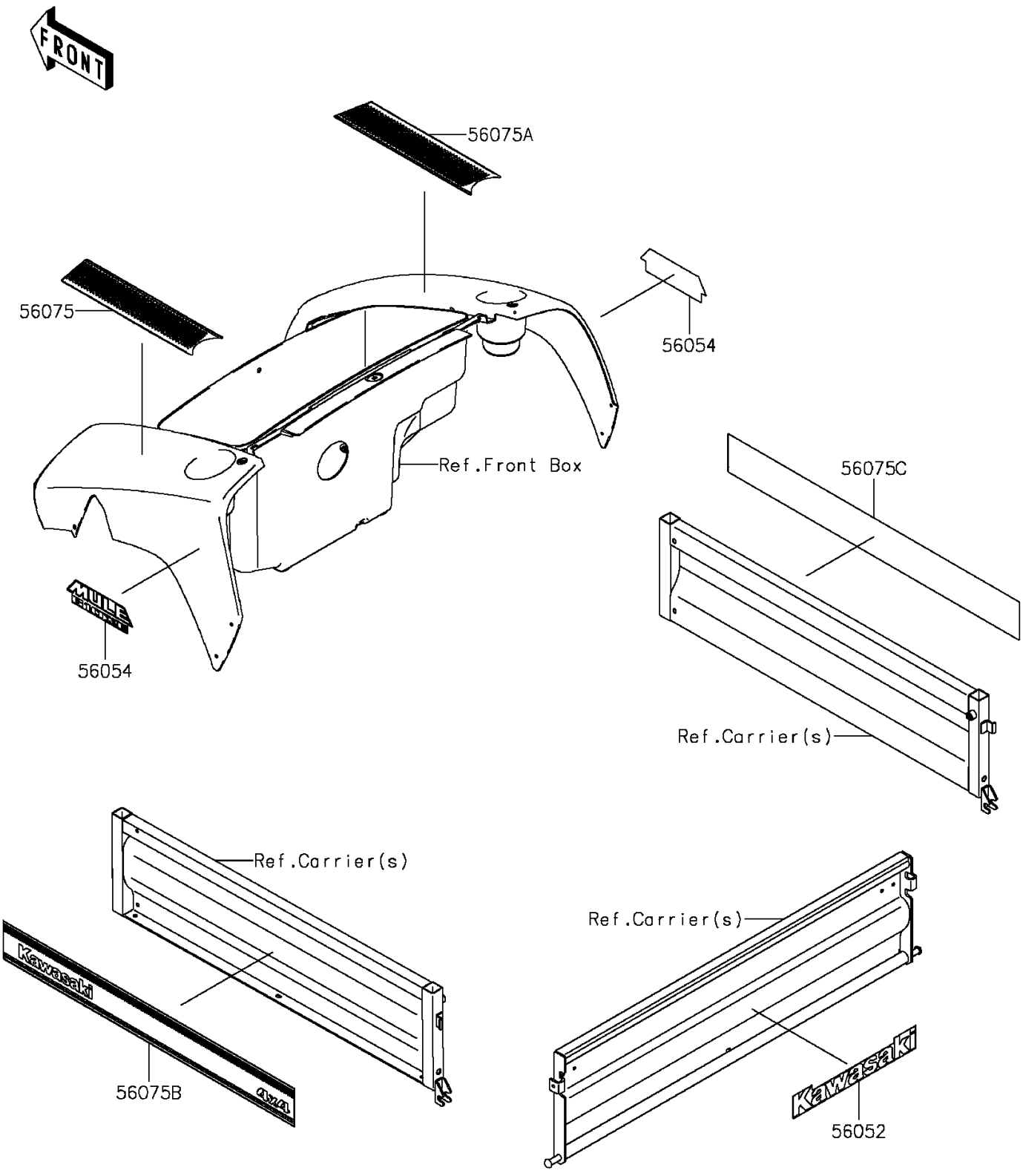

© 2026 Kawasaki Motors Corp., U.S.A.

2016 MULE™ 610 4x4 XC

PARTS LIST

Decals(DGF)

ITEM NAME	PART NUMBER	QUANTITY
MARK,KAWASAKI (Ref # 56052)	56052-1809	1
MARK,FR FENDER,MULE610XC (Ref # 56054)	56054-1813	2
PATTERN,FR FENDER,LH (Ref # 56075)	56075-0664	1
PATTERN,FR FENDER,RH (Ref # 56075A)	56075-0665	1
PATTERN,SIDE PLATE,LH (Ref # 56075B)	56075-0666	1
PATTERN,SIDE PLATE,RH (Ref # 56075C)	56075-0667	1

© 2026 Kawasaki Motors Corp., U.S.A.