2015 Mule™ 610 4x4 XC

PARTS DIAGRAM

Decals(DFF)

F2861

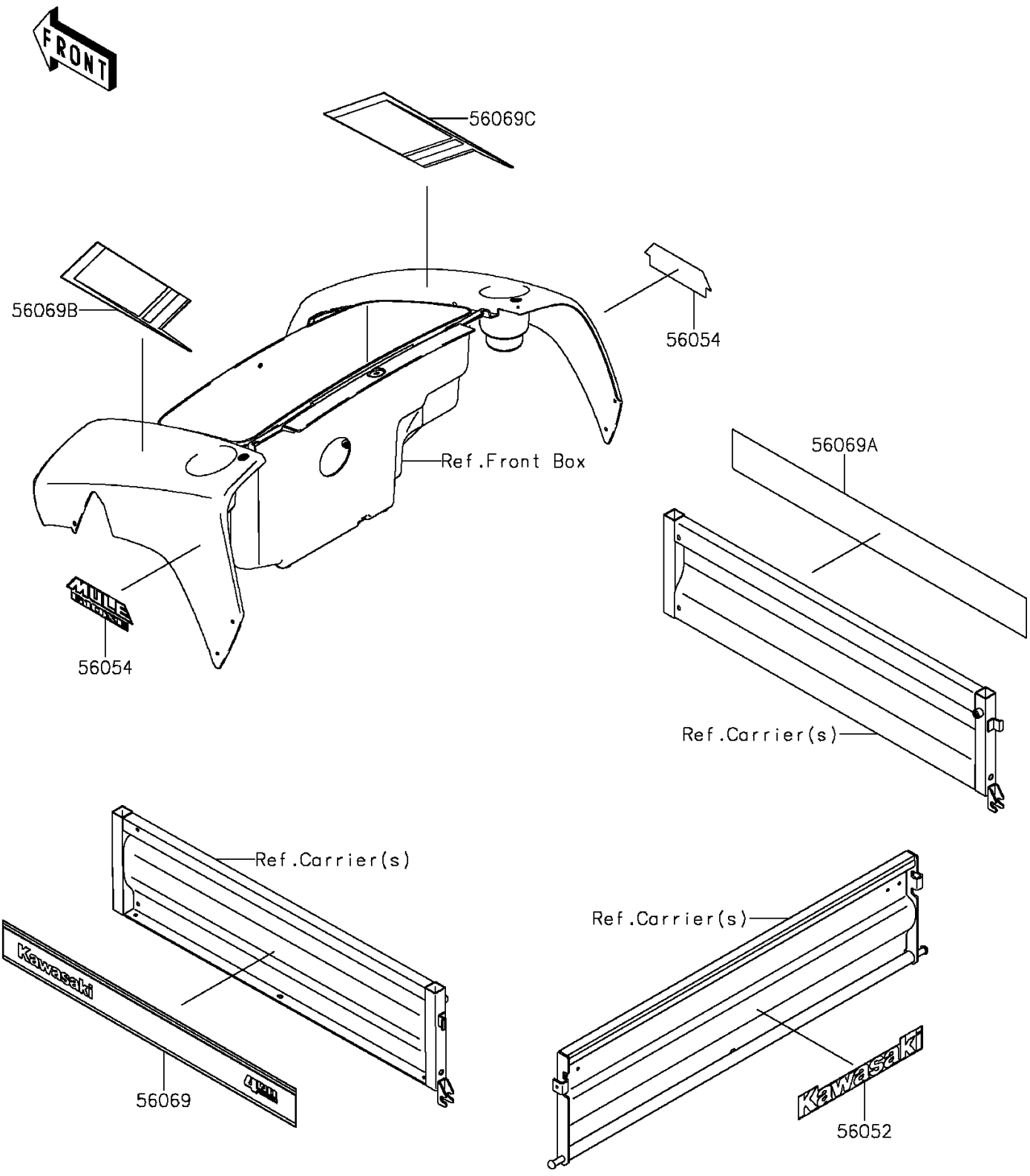

© 2026 Kawasaki Motors Corp., U.S.A.

2015 Mule™ 610 4x4 XC

PARTS LIST

Decals(DFF)

ITEM NAME	PART NUMBER	QUANTITY
MARK,KAWASAKI (Ref # 56052)	56052-1809	1
MARK,FR FENDER,MULE 610XC (Ref # 56054)	56054-1365	2
PATTERN,SIDE PLATE,LH (Ref # 56069)	56069-7353	1
PATTERN,SIDE PLATE,RH (Ref # 56069A)	56069-7354	1
PATTERN,FR FENDER,LH (Ref # 56069B)	56069-7355	1
PATTERN,FR FENDER,RH (Ref # 56069C)	56069-7356	1

© 2026 Kawasaki Motors Corp., U.S.A.