2016 MULE™ 610 4x4 XC

PARTS DIAGRAM

Oil Pump/Oil Filter

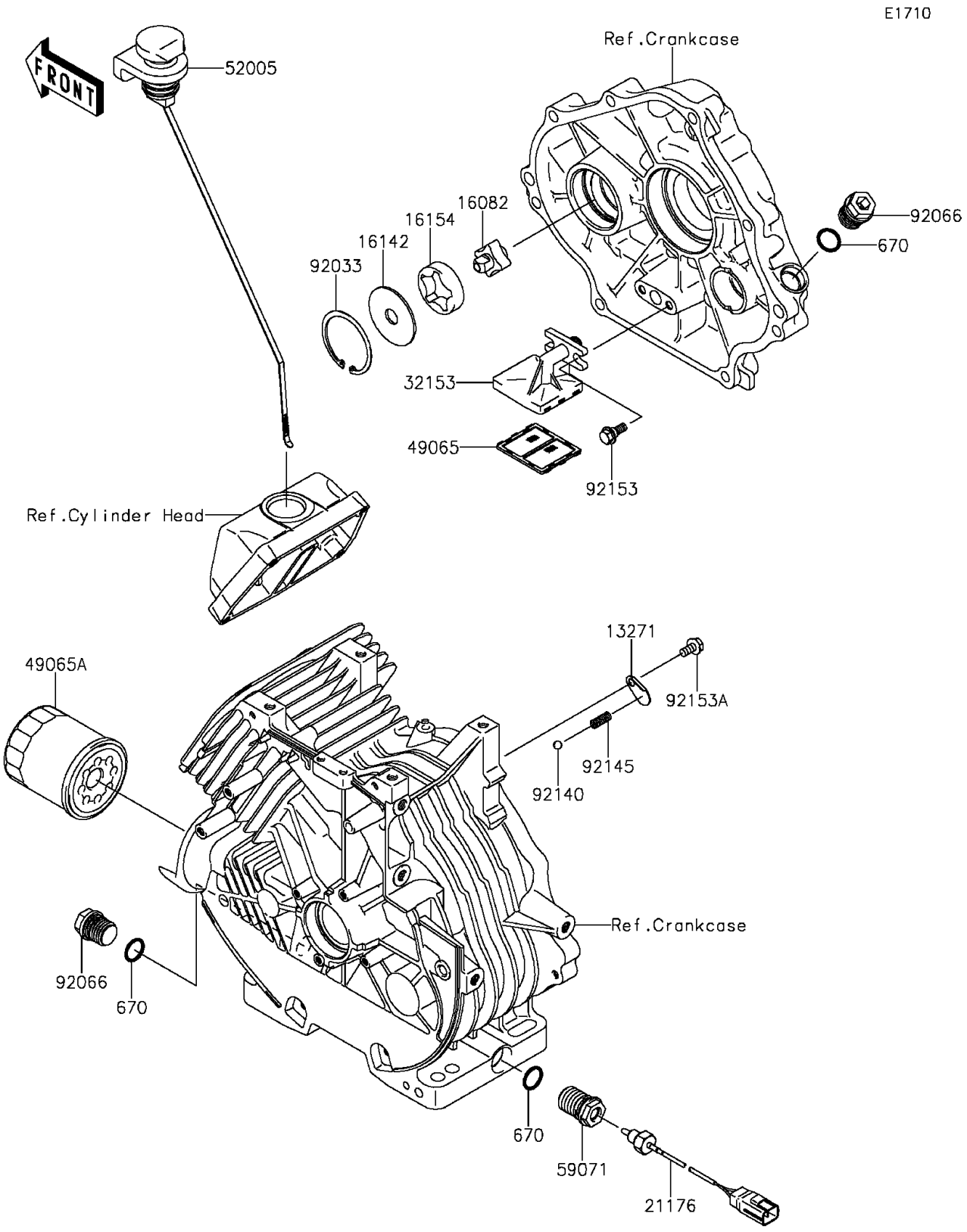

© 2026 Kawasaki Motors Corp., U.S.A.

2016 MULE™ 610 4x4 XC

PARTS LIST

Oil Pump/Oil Filter

ITEM NAME	PART NUMBER	QUANTITY
PLATE,OIL RELIEF (Ref # 13271)	13271-7026	1
PUMP-ASSY-OIL (Ref # 16082)	16082-7002	1
COVER-PUMP (Ref # 16142)	16142-7001	1
ROTOR-PUMP,OUT (Ref # 16154)	16154-2054	1
SENSOR,OIL TEMP (Ref # 21176)	21176-2108	1
PIPE (Ref # 32153)	32153-7002	1
FILTER-OIL (Ref # 49065)	49065-7005	1
FILTER-OIL (Ref # 49065A)	49065-7010	1
GAUGE,OIL LEVEL (Ref # 52005)	52005-7020	1
JOINT,SENSOR (Ref # 59071)	59071-2150	1
RING-SNAP (Ref # 92033)	92033-7008	1
PLUG (Ref # 92066)	92066-7003	2
BALL (Ref # 92140)	92140-7001	1
SPRING,OIL RELIEF (Ref # 92145)	92145-7035	1
BOLT,FLANGED,6X16 (Ref # 92153)	92153-7007	2
BOLT,6X12 (Ref # 92153A)	92153-7043	1
O RING,16MM (Ref # 670)	670D2016	3

© 2026 Kawasaki Motors Corp., U.S.A.