2016 MULE™ 610 4x4 XC

PARTS DIAGRAM

Air Cleaner-Belt Converter

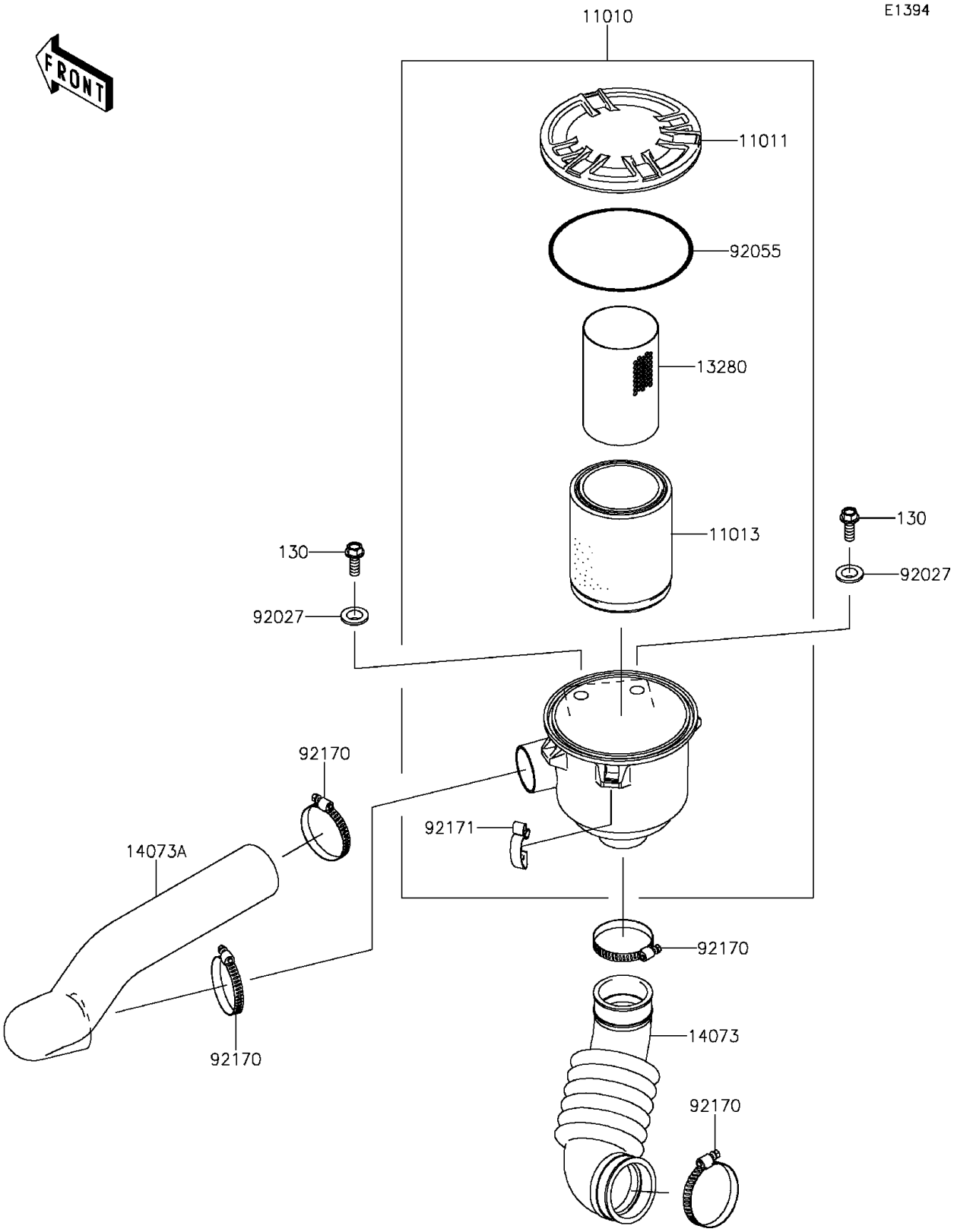

© 2026 Kawasaki Motors Corp., U.S.A.

2016 MULE™ 610 4x4 XC

PARTS LIST

Air Cleaner-Belt Converter

ITEM NAME	PART NUMBER	QUANTITY
FILTER-ASSY-AIR (Ref # 11010)	11010-0172	1
CASE-AIR FILTER,CAP (Ref # 11011)	11011-0135	1
ELEMENT-AIR FILTER (Ref # 11013)	11013-0037	1
HOLDER (Ref # 13280)	13280-0312	1
DUCT,AIR FILTER-CASE (Ref # 14073)	14073-0061	1
DUCT,BAR-AIR FILTER (Ref # 14073A)	14073-0080	1
COLLAR (Ref # 92027)	92027-1354	2
RING-O,122X4 (Ref # 92055)	92055-0167	1
CLAMP (Ref # 92170)	92170-1674	4
CLAMP (Ref # 92171)	92171-0225	3
BOLT-FLANGED,8X22 (Ref # 130)	130BA0822	2

© 2026 Kawasaki Motors Corp., U.S.A.