# 1988 Vulcan 88

## PARTS DIAGRAM

### Change Drum/Shift Fork

E1362-0122

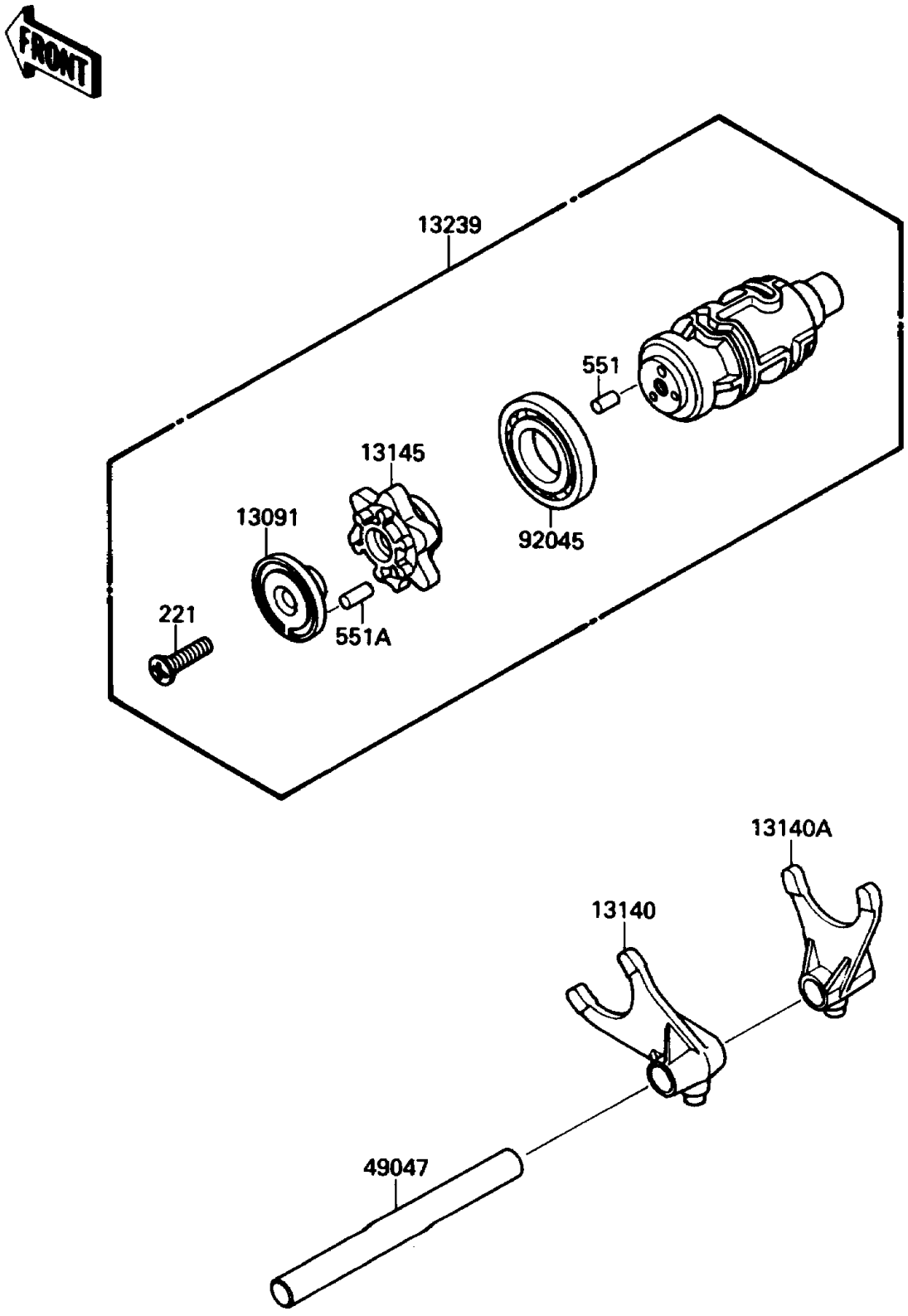


© 2026 Kawasaki Motors Corp., U.S.A.

# 1988 Vulcan 88

## PARTS LIST

### Change Drum/Shift Fork

| ITEM NAME | PART NUMBER | QUANTITY |
|---|---|---|
| HOLDER,CHANGE DRUM PIN (Ref # 13091) | 13091-1104 | 1 |
| FORK-SHIFT,INPUT,2ND (Ref # 13140) | 13140-1155 | 1 |
| FORK-SHIFT,OUTPUT,3RD (Ref # 13140A) | 13140-1156 | 1 |
| CAM-CHANGE DRUM (Ref # 13145) | 13145-1062 | 1 |
| DRUM-ASSY-CHANGE (Ref # 13239) | 13239-1141 | 1 |
| ROD-SHIFT (Ref # 49047) | 49047-1062 | 1 |
| BEARING-BALL,#6005C4 (Ref # 92045) | 92045-1056 | 1 |
| SCREW-CSK-CROS,6X45 (Ref # 221) | 221B0645 | 1 |
| PIN-DOWEL,4X8 (Ref # 551) | 551A0408 | 1 |
| PIN-DOWEL (Ref # 551A) | 551A0412 | 1 |

© 2026 Kawasaki Motors Corp., U.S.A.