2015 MULE™ 600

PARTS DIAGRAM

Fuel Tank

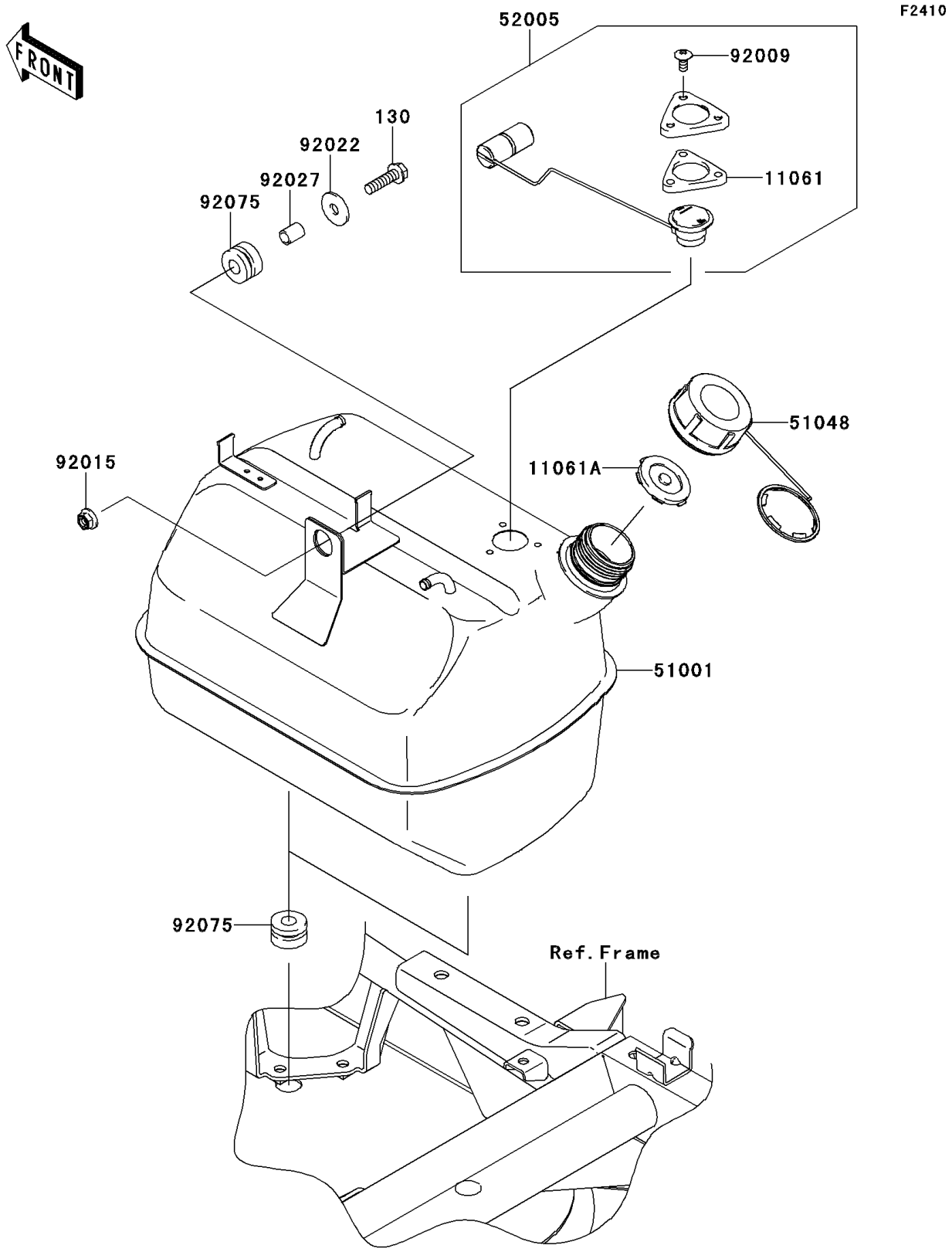

© 2026 Kawasaki Motors Corp., U.S.A.

2015 MULE™ 600

PARTS LIST

Fuel Tank

ITEM NAME	PART NUMBER	QUANTITY
GASKET,FUEL GAUGE (Ref # 11061)	11061-0120	1
GASKET,FUEL TANK CAP (Ref # 11061A)	11061-7508	1
TANK-COMP-FUEL (Ref # 51001)	51001-0341	1
CAP-ASSY-TANK,FUEL (Ref # 51048)	51048-0026	1
GAUGE,FUEL (Ref # 52005)	52005-0080	1
SCREW,6X14 (Ref # 92009)	92009-1541	3
NUT,LOCK,FLANGED,8MM (Ref # 92015)	92015-1397	1
WASHER,9X28X2.3 (Ref # 92022)	92022-1632	1
COLLAR,8.8X12X15.5 (Ref # 92027)	92027-1081	1
DAMPER (Ref # 92075)	92075-1736	3
BOLT-FLANGED,8X30 (Ref # 130)	130AA0830	1

© 2026 Kawasaki Motors Corp., U.S.A.