2011 MULE™ 610 4x4

PARTS DIAGRAM

Steering Wheel

F2311



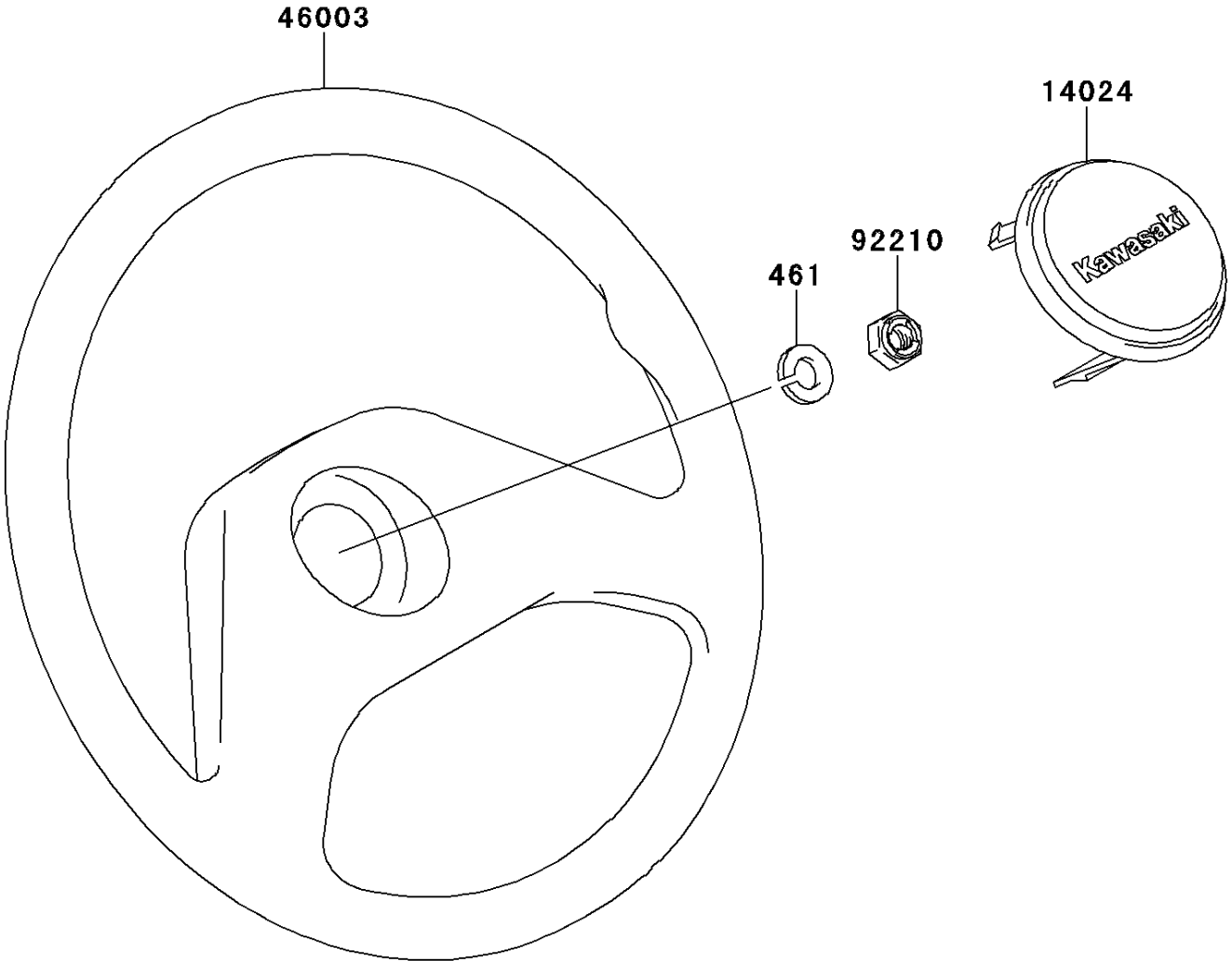

© 2026 Kawasaki Motors Corp., U.S.A.

2011 MULE™ 610 4x4

PARTS LIST

Steering Wheel

ITEM NAME	PART NUMBER	QUANTITY
COVER,HORN SWITCH (Ref # 14024)	14024-1574	1
HANDLE,STEERING (Ref # 46003)	46003-1265	1
NUT,LOCK,12MM (Ref # 92210)	92210-1249	1
WASHER-SPRING,12MM (Ref # 461)	461DA1200	1

© 2026 Kawasaki Motors Corp., U.S.A.