2011 MULE™ 610 4x4

PARTS DIAGRAM

Fenders

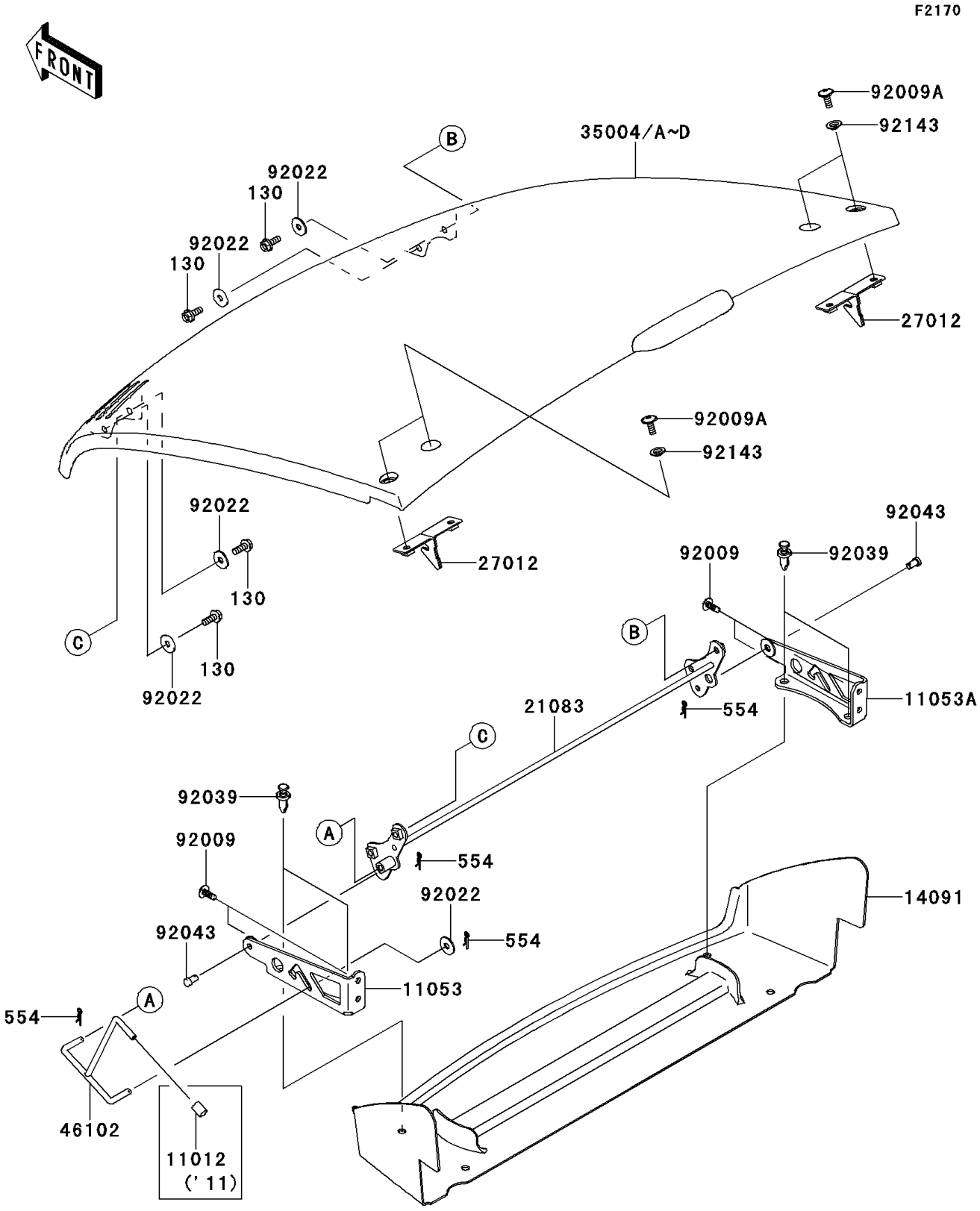

© 2026 Kawasaki Motors Corp., U.S.A.

2011 MULE™ 610 4x4

PARTS LIST

Fenders

ITEM NAME	PART NUMBER	QUANTITY
CAP (Ref # 11012)	11012-1899	1
BRACKET (Ref # 11053)	11053-1451	1
BRACKET (Ref # 11053A)	11053-1452	1
COVER (Ref # 14091)	14091-0368	1
ARM (Ref # 21083)	21083-0021	1
HOOK (Ref # 27012)	27012-0065	2
FENDER-FRONT,HOOD,D.R.RED (Ref # 35004)	35004-0029-16L	1
FENDER-FRONT,HOOD,S.BLACK (Ref # 35004D)	35004-0029-839	1
ROD (Ref # 46102)	46102-0048	1
SCREW,TAPPING,6X16 (Ref # 92009)	92009-1166	4
SCREW,6X16 (Ref # 92009A)	92009-1621	4
WASHER,6.5X20X1.6,BLACK (Ref # 92022)	92022-1346	5
RIVET (Ref # 92039)	92039-1229	4
PIN,6X9 (Ref # 92043)	92043-1626	2
COLLAR (Ref # 92143)	92143-1087	4
BOLT-FLANGED,6X16 (Ref # 130)	130BB0616	4
PIN-SNAP (Ref # 554)	554DA0600	4

© 2026 Kawasaki Motors Corp., U.S.A.