# 2014 MULE™ 610 4x4

## PARTS DIAGRAM

### Frame Fittings(Front)

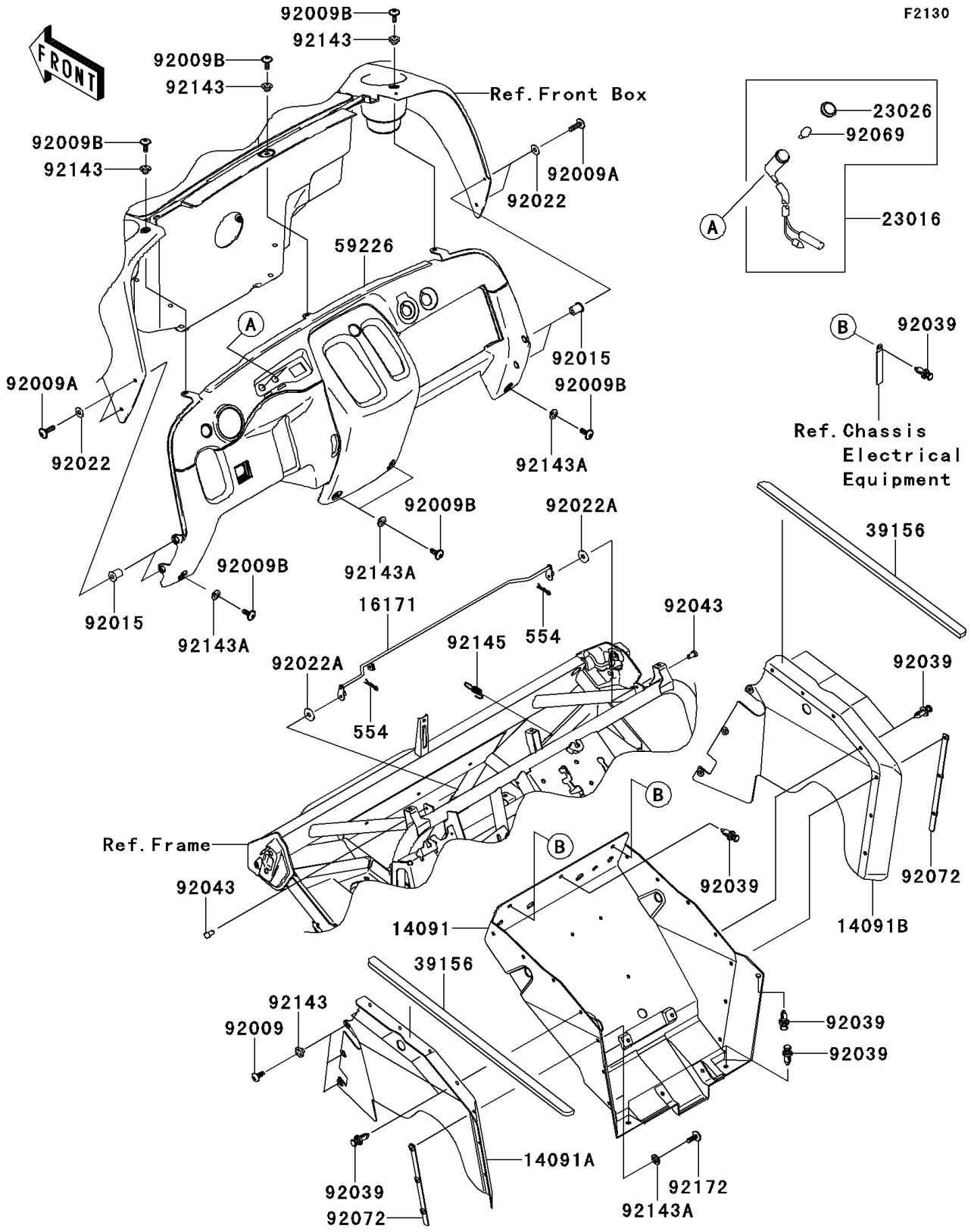


© 2026 Kawasaki Motors Corp., U.S.A.

# 2014 MULE™ 610 4x4

## PARTS LIST

### Frame Fittings(Front)

| ITEM NAME | PART NUMBER | QUANTITY |
|---|---|---|
| COVER,FLOOR,CNT (Ref # 14091) | 14091-0408 | 1 |
| COVER,FLOOR,SIDE,LH (Ref # 14091A) | 14091-0424 | 1 |
| COVER,FLOOR,SIDE,RH (Ref # 14091B) | 14091-0425 | 1 |
| LINK,HOOD (Ref # 16171) | 16171-7501 | 1 |
| LAMP-ASSY,TEMP (Ref # 23016) | 23016-1128 | 2 |
| LENS,TEMP LAMP (Ref # 23026) | 23026-1157 | 2 |
| PAD (Ref # 39156) | 39156-0071 | 2 |
| PANEL-CONTROL,GRAY (Ref # 59226) | 59226-0009-284 | 1 |
| SCREW,TAPPING,6X16 (Ref # 92009) | 92009-1166 | 6 |
| SCREW,6X22,BLACK (Ref # 92009A) | 92009-1256 | 4 |
| SCREW,6X16 (Ref # 92009B) | 92009-1621 | 7 |
| NUT (Ref # 92015) | 92015-1700 | 4 |
| WASHER,6.5X16X1 (Ref # 92022) | 92022-1143 | 4 |
| WASHER,6.5X20X1.6,BLACK (Ref # 92022A) | 92022-1346 | 2 |
| RIVET (Ref # 92039) | 92039-1229 | 15 |
| PIN,6X9 (Ref # 92043) | 92043-1626 | 2 |
| BULB,12V 1.7W,T10 (Ref # 92069) | 92069-1059 | 2 |
| BAND (Ref # 92072) | 92072-0042 | 2 |
| COLLAR (Ref # 92143) | 92143-1057 | 9 |
| COLLAR (Ref # 92143A) | 92143-1087 | 10 |
| SPRING (Ref # 92145) | 92145-0215 | 1 |
| SCREW,6X18 (Ref # 92172) | 92172-0002 | 6 |
| PIN-SNAP (Ref # 554) | 554DA0600 | 2 |

© 2026 Kawasaki Motors Corp., U.S.A.