2014 MULE™ 610 4x4

PARTS DIAGRAM

Frame

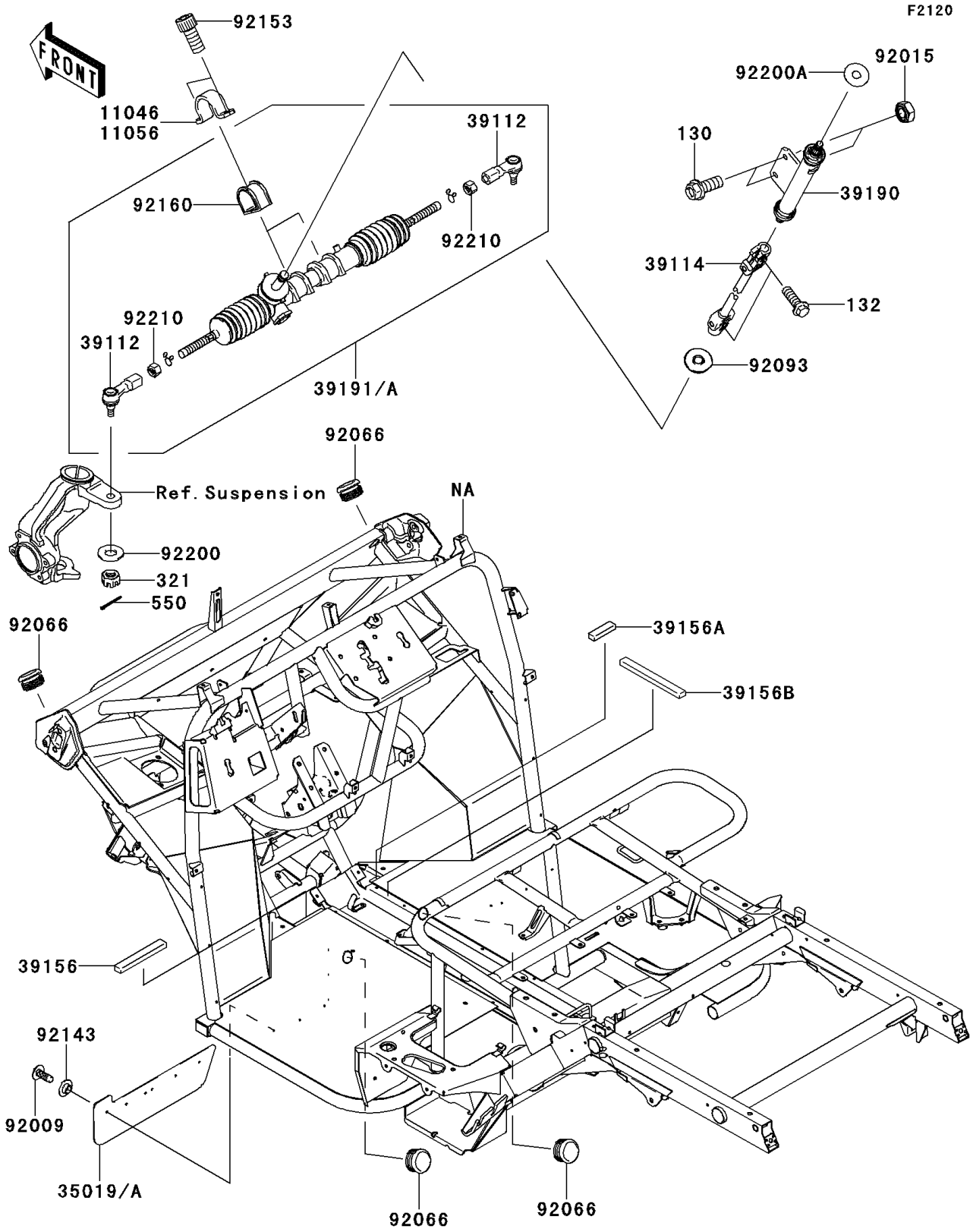

© 2026 Kawasaki Motors Corp., U.S.A.

2014 MULE™ 610 4x4

PARTS LIST

Frame

ITEM NAME	PART NUMBER	QUANTITY

© 2026 Kawasaki Motors Corp., U.S.A.